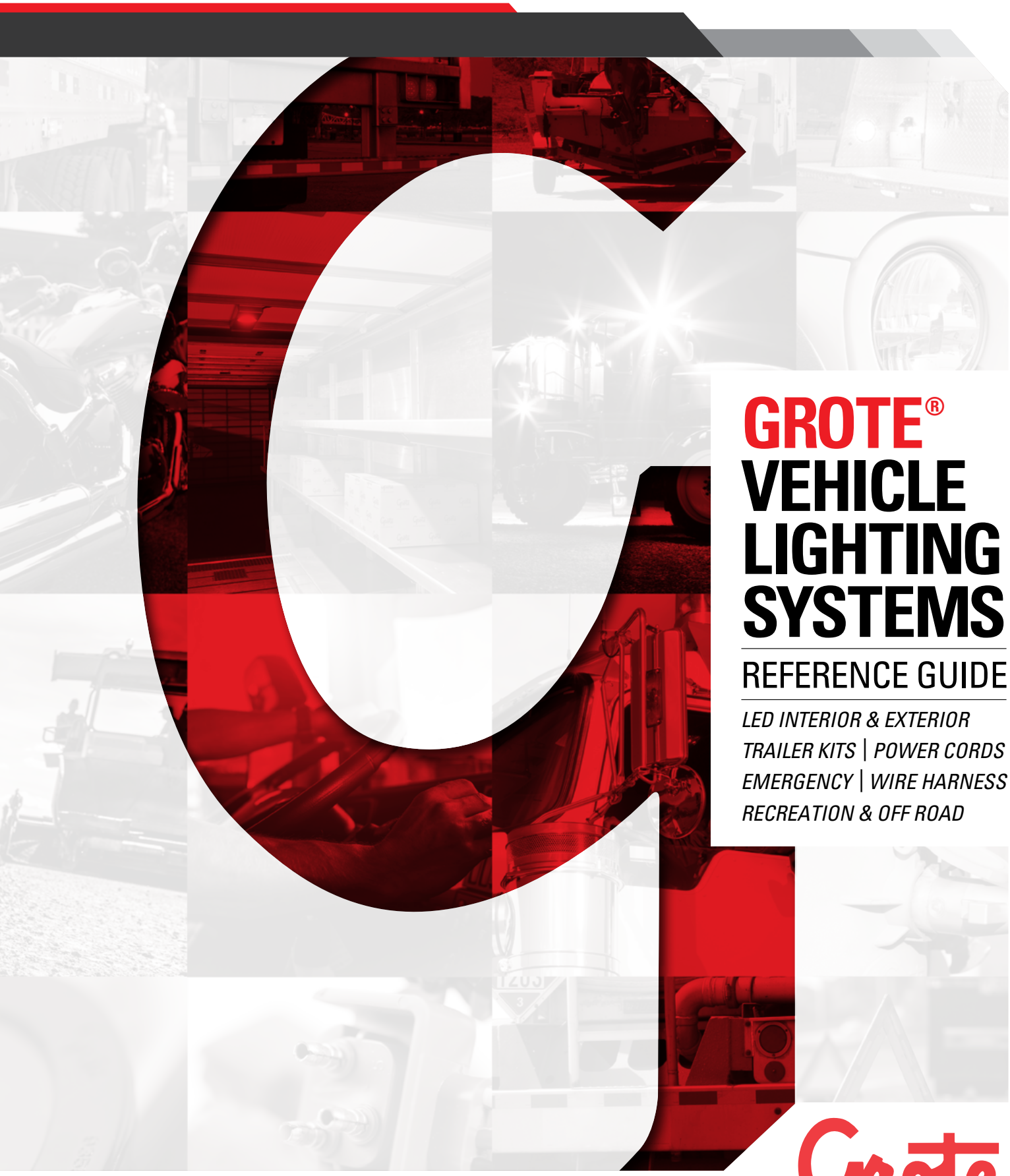

GROTE® VEHICLE LIGHTING SYSTEMS

REFERENCE GUIDE

LED INTERIOR & EXTERIOR
TRAILER KITS | POWER CORDS
EMERGENCY | WIRE HARNESS
RECREATION & OFF ROAD

Grote®

GROTE®: A WORLDWIDE LEADER IN VEHICLE LIGHTING AND SAFETY SYSTEMS

Our customers span the globe. So do we.

Grote Industries Headquarters, located in Madison, Indiana, USA, continually redefines and improves lighting technology for the international vehicle safety and vocational markets.

Grote Europe, located in Bogen, Germany, is Grote's European headquarters and is responsible for design and production of lighting safety systems to meet specific European requirements.

Grote Electronics, located in Waterloo, Canada, is a state-of-the-art, high-volume manufacturing facility dedicated to assembling Grote's light emitting diode (LED) circuit boards and electronic-based specialty products.

Grote of Canada, located in Markham, Ontario, is the headquarters for the manufacturing and development of the Grote Electrical Accessory lines, serving the original equipment and aftermarket channels for the entire Canadian market.

Grote Latin America, located in Monterrey, Mexico, is responsible for development and production of Grote wiring and trailer harnesses, including Grote's patented ULTRA-BLUE-SEAL® pigtail and harness system.

Grote Asia, located in Shanghai and Zhuzhou, China, is a wholly-owned foreign enterprise of Grote Industries, formed in November 2007 as an answer to continuous cost reduction and consolidation of imported products.

 © 2019 All Rights Reserved, Grote® Industries, Inc.

TABLE OF CONTENTS

GP 18-33
GROTE® PRODUCT PLATFORM
PLATEFORME DE PRODUITS GROTE®
PLATAFORMA DE PRODUCTOS GROTE®

01 34-73
CLEARANCE/MARKER LAMPS
FEUX DE GABARIT / POSITION
LÁMPARAS DE GÁLIBO / DEMARCADORA

02 74-109
STOP/TAIL/TURN LAMPS
FEUX ARRÊT / ARRIÈRE / DIRECTION
LÁMPARAS DE FRENO / CUARTO / DIRECCIONAL

03 110-117
LIGHT DUTY TRAILER LIGHTING
ÉCLAIRAGE POUR REMORQUE LÉGÈRE
ILUMINACIÓN PARA REMOLQUE, PARA TRABAJO LIVIANO

04 118-133
LICENSE AND BACK-UP
FEUX DE PLAQUE D'IMMATRICULATION ET DE RECUL
LÁMPARAS DE PLACA / REVERSA

05 134-151
INTERIOR LIGHTING
LUMIÈRES D'INTÉRIEUR
LÁMPARAS PARA INTERIOR

06 152-157
XTL® APPLICATIONS, CREATIVITY
XTL® UTILISATIONS, CRÉATIVITÉ
XTL® APLICACIONES, CREATIVIDAD

07 158-167
FORWARD LIGHTING
PHARES UTILITAIRES
FAROS DELANTEROS

08 168-189
WORK LIGHTING
LAMPE DE TRAVAIL
ILUMINACIÓN DE TRABAJO

09 190-209
WARNING AND HAZARD
GYROPHARES ET FEUX D'AVERTISSEMENT
LÁMPARAS DE ADVERTENCIA Y PRECAUCIÓN

10 210-219
FLASHERS AND TURN SIGNAL SWITCHES
CLIGNOTANTS ET COMMUTATEURS
PALANCAS DIRECCIONALES / DESTELLADORES

11 220-233
MIRRORS
RÉTROVISEURS
ESPEJOS

12 234-253
TRAILER WIRING AND COMMUNICATIONS SYSTEMS
SYSTÈMES DE COMMUNICATION ET FILAGE DE REMORQUES
SISTEMAS DE ARNESES PARA REMOLQUE / CAJA DE CONEXIÓN

13 254-263
PIGTAILS
SPIRALES DE RACCORD
CONECTORES

14 264-283
MOUNTING OPTIONS
OPTIONS DE FIXATION
OPCIONES DE MONTAJE

15 284-289
REFLECTORS
RÉFLECTEURS
REFLECTANTES

16 290-293
MISCELLANEOUS
AUTRES
MISCELÁNEA

17 294-320
TECHNICAL INFORMATION
INFORMATION TECHNIQUE
INFORMACIÓN TÉCNICA

© 2019 All Rights Reserved, Grote® Industries, Inc.

VISIT GROTE.COM TO GET THE MOST UP-TO-DATE PRODUCT INFORMATION

Whether you prefer desktop, tablet, or mobile, ***GROTE.COM*** puts all the Grote® lighting and electrical accessory information at your fingertips, wherever you may be.

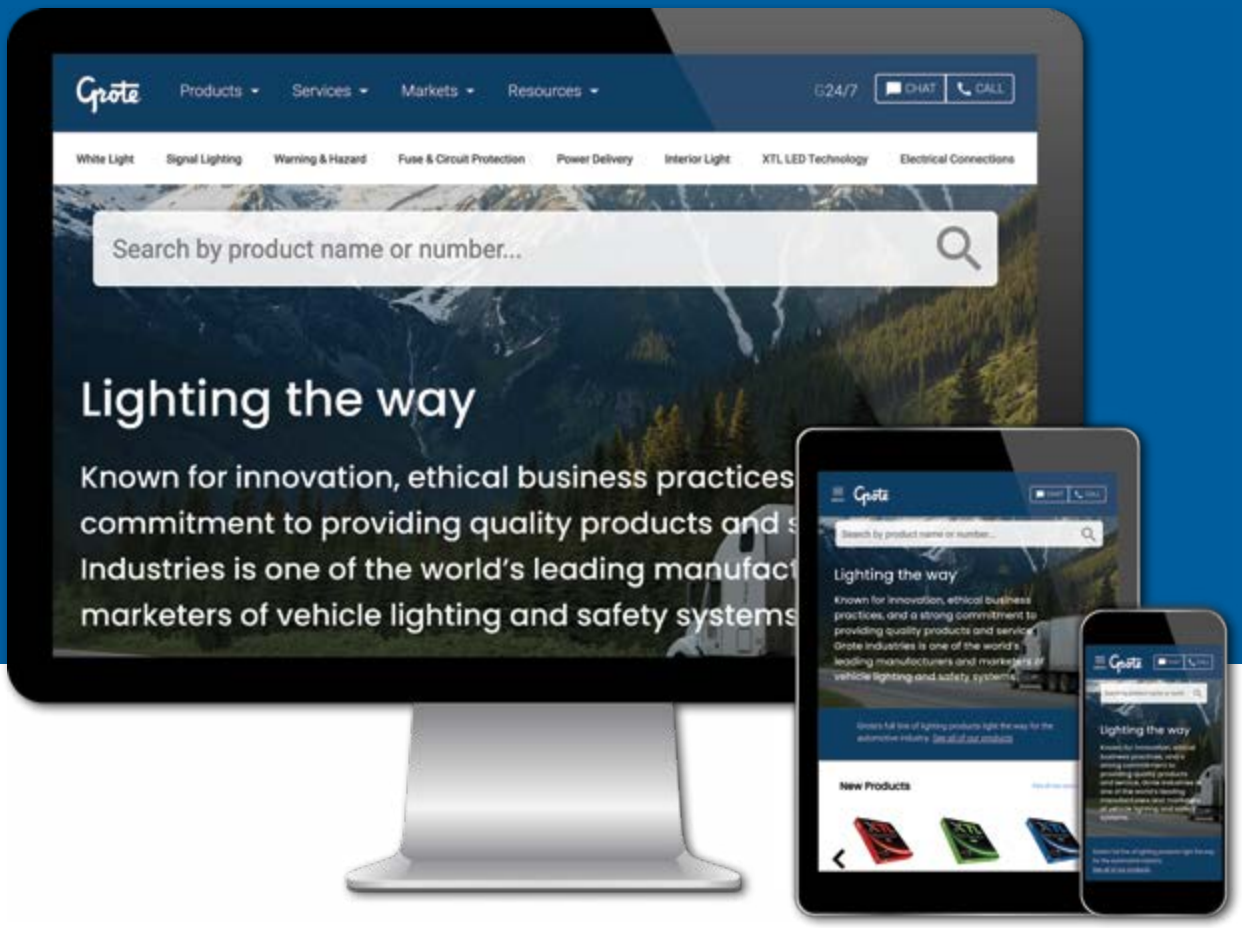

GROTE.COM –THE ULTIMATE REFERENCE!

- ***HIGH-RESOLUTION IMAGERY***
- ***UP-TO-DATE STATS AND INFORMATION***
- ***UNIQUE 360° VIEWS OF MANY PRODUCTS***
- ***LATEST PRODUCT RELEASES***

Grote®

 © 2019 All Rights Reserved, Grote® Industries, Inc.

SIGN-UP FOR GROTE'S ENHANCED G24/7 VISIT ORDERS.GROTE.COM

Grote® Industries is pleased to announce the launch of the enhanced G24/7 system. This complimentary service is an innovative way to place orders, track order status and view all your Grote® product activity. From the convenience of your computer or mobile device, you can now access previously unavailable information that will help you more successfully manage your business and inventory.

ORDERS.GROTE.COM

NEW FEATURES

- ***PAY ANY INVOICE ONLINE ANY TIME***
- ***EASY CREDIT CARD PROCESSING***
- ***NOW MOBILE FRIENDLY***
- ***REPRINT PACKING LISTS AND INVOICES***

UPLOAD FROM MICROSOFT® EXCEL
Customers can also upload items from Microsoft® Excel to create orders.

REFER AND REORDER USING "MY LIST"
The user can create a list of products for future reference or to reorder.

E-MAIL NOTIFICATION
When a new order is created and when an order is shipped, unlimited recipients can receive an instant e-mail notification.

ORDER ENTRY ONLINE BY CUSTOMER PART NUMBER

USING G24/7, YOU CAN QUICKLY AND EASILY:

- Track the status of current orders
- Check the status of backorders
- Check for substitutions or replacements for obsolete parts
- Check Grote® inventory availability
- Confirm ship dates
- Link to shipping carrier
- View invoice information
- Track credits
- View weight & packaging information
- View previously placed orders
- View product technical information
- Reprint packing lists and invoices

© 2019 All Rights Reserved, Grote® Industries, Inc.

GROTE® PRODUCT NUMBERING SYSTEM

Grote® uses a meaningful product numbering system that makes it possible to quickly locate the correct product and verify the correct product has been selected. The typical Grote® part number contains five digits, followed by a hyphen, followed be a single digit. Here's what it all means.

The first four digits or alpha characters (0000-0) indicate the product category.

0000 Displays
4000 Reflectors
4210 Brackets and Permit Holders
4400 Switches
4450 Flashers
4500 Clearance/Marker/Cab/ID or Bar Lamps
4600 Clearance/Marker/Cab/ID or Bar Lamps
4700 Clearance/Marker/Cab/ID or Bar Lamps
4800 Turn Signal Switch
4900 Clearance/Marker/Cab/ID or Bar Lamps
5000 Combination S/T/T or single function turn lamps
5100 Combination S/T/T or single function turn lamps
5200 Combination S/T/T or single function turn lamps
5300 Combination S/T/T or single function turn lamps
5400 Combination S/T/T or single function turn lamps
5500 Combination S/T/T or single function turn lamps
5600 Combination S/T/T or single function turn lamps
5700 Combination S/T/T or single function turn lamps
5800 Combination S/T/T or single function turn lamps
5900 Combination S/T/T or single function turn lamps
6000 License Lamp/Courtesy Lamps
6100 Dome/Map/Stepwell
6200 Back-up lamps
6300 Flood/Fog/Tractor/Driving Lamp
6400 Flood/Fog/Tractor/Driving Lamp
6500 Boat Kits
6600 Spliceless Harness System
6700 Wire Kits/Pigtail and Wire Ass'y European System
6750 Rear Sills
6800 Wire Kits/Pigtails
6850 Main Harnesses
6900 T/S Harness Kits
7000 Flags
7100 Flares
7200 Fuses and Horns
7300 Back-up Alarms
7600 Roto Beacons
7700 School Bus
7800 Warning
8200 Military Lamps
8300 Military Lamps
8500 Automotive Replacement lenses
8600 Automotive Replacement lenses
8700 Cable Assemblies
8720 7-Way Plug and Socket
8730 7-Way Plug and Socket
8740 Spring
8750 Inserts used on 6/7 plug and sockets
8760 Boots
8770 Replacement Motors and Elec. Equip.
9000 Lens Assemblies
9800 Misc. Packaged Items
9900 Misc. Packaged Items

The next digit or alpha character (0000-0) indicate the product color or finish.

Lens	Finish
0 Two colors	
1 Clear, white	1 White
2 Red	2 Black
3 Yellow	3 Chrome/Stainless Steel
4 Green	4 Aluminum
5 Blue	5 Zinc

The sixth digit (00000-0) indicates packaging.

0 Item only
1 Ind. Display
2 Ind. Plain
3 Bulk
4 Pair Pack
5 Bubble Pack, Display Pack, Clam Shell or Retail Pack
6 Fleet Pack
7 Multiple Pack (Kit)

The absence of the sixth digit indicates product is in standard shelf packaging, e.g., individual pack or polybag, and in the case of lenses a standard shelf pack will have 6 to 12 to a container. Refer to your price sheet for exact quantity and other pack types.

Reference Notes:
For each product listing we have included the latest applicable Federal Motor Vehicle Standards [FMVSS], SAE® code and technical specifications. In this area we have also listed related accessory items such as Pigtails, Brackets and Grommets.

The part numbers listed are suggested items; they may not be the only alternative. However, additional part numbers that may better fit your application can be located in the Pigtail, or Mounting Options Sections.

PC = PC lamp rating
ECE = ECE - European Certified
24 VOLT = 24 Volts
MULTI = Multiple Voltage
RETAIL = Retail Packaging
FOG = Compliant for SAE J583™ 2004

 © 2019 All Rights Reserved, Grote® Industries, Inc.

MODEL NUMBER INDEX

Model No.	Page
01-5444-75	89
01-5445-75	89
01-6605-W3	239, 241
01-6605-W7	239, 241
01-6605-X4	239, 241
01-6606-X3	239, 241
01-6608-E9	247
01-6608-F9	247
01-6620-C8	237, 239, 241
01-6620-C9	237, 239
01-6620-E9	241
01-6620-F1	241
01-6620-F2	241
01-6620-F3	241
01-6621-A9	237, 239
01-6621-C1	241
01-6621-C3	241
01-6621-C7	241
01-6660-K3	237
01-6660-M6	239, 241
01-6661-A2	239, 241
01-6670-L5	237
01-6693-74	237, 239, 241
01-6707-A9	237, 239, 241
01-6707-C2	241
01-6707-C3	237, 239
01-6758-86	237, 239, 241
01-6758-87	237, 239, 241
05-2018-47	237, 239, 241
05-2018-93	237, 239
61E41	137
61E51	135
61E81	140
61E91	140
61F01	140
61F30	136
61F51	136
61F61	135
61F81	140
61G01	140
61G21	135
61G31	26, 141
61H01	137
61H51	137
61H91	135
61J11	135
61M11	135
61N11	135
63E23	172
63E41	177
63E51	177
63E71	177
63F21	173
63F31	173
63F81	174
63F81-5	174
63F91	174
63G01	174
63G11	174
63H01	179
63H11	179
63H31	172
63H81	179
63J01	175
63J11	175
63J21	175
63J31	175
63L21	172
63U01	172
63U41	172
63W01	173
63W11	173
63W21	173
63W31	173
63W41	173
63W61	173
63W71	173
63Z61	177
63Z71	177
63Z81	177
64E01	178
64E01-5	178
64E11	178
64E11-5	178
64F11	178
64F71	178
64G01	178
64G01-5	178
64G11	178
64G11-5	178
64G41	178
64G51	178
64G61	178
64G71	178
64H51-4	163
64H51-5	163
64H61-4	163
64H61-5	163
64H71-5	159
64H81-5	160
64J11	180
64J21	180
64J31	180
64J61-5	161
64J71-5	161
64M11-5	170
64M21-5	171
02001-4	164
05001-5	165
05041-5	165
05051-5	165
05301-5	165
06001-4	165
06021-4	165
06201	165
07401	166
09561	188
09681	188
09781	188
09793	188
10002	232
10012	232
10013	232
10025	232
10045	232
10073	232
10173	233
10433	226
10623	232
11133	233
11195	227
11293	233
11303	233
12004	230
12004-5	230
12010	226
12014	230
12014-5	230
12020	226
12052	224
12053	224
12071	228
12072	228
12073	228
12073-5	228
12102	229
12111-5	228, 229
12112-5	228
12113-5	228, 229
12122	230
12153	227
12164	230
12164-5	230
12172	225
12173	225
12182	225
12183	225, 226, 227
12193-5	229
12201-5	230
12243-5	228
12263-5	229
12272-5	226
12283	225
12293	225
12301	228
12303	228
12312-5	231
12331	228
12333	228
12813	225
12983	225
16021	221
16023	221
16032	225
16033	225
16041	222
16043	222
16053	222
16091	222
16092	222
16093	222
16101	222
16102	222
16123	222
16153	222
16202	222
16244	222
16273	222
16284	222
18302-5	231
22013	223, 231
22193	226
22233	223, 231
26001-5	222
28032	224
28033	224
28033-5	224
28042	224
28043	224
28051	230
28063	227
28152	224
28162	224
28193	226
28252-5	230
28323-5	229
28393-5	229
28443	226
28453	228
28461	222
28463	222
28481	227
28491	227
28493	227
28663	224
28763	230
29060	223, 231
40052	287
40052-5	287
40053	287
40062	287
40063	287
40072	287
40072-5	287
40073	287
40073-5	287
40092	288
40093	288
40132	286
40132-5	286
40133	286
40133-5	286
40152	288
40153	288
40192	288
40193	288
40232	288
40232-5	288
40233	288
40233-5	288
40302	286
40303	286
40641	285
40641-5	285
40650	285
40650-5	285
40701	285
41002	287
41003	287
41012	288

© 2019 All Rights Reserved, Grote® Industries, Inc.

MODEL NUMBER INDEX

Model No.	*Page*
41013	288
41032	286
41033	286
41042	286
41043	286
41050	285
41121	285
41122	285
41133	285
41142	285
41143	285
41152	285
41153	285
41160	285
42063	69, 265
42070	69, 272
42103	278
42110	69, 270
42120	69, 270
42152	107, 277
42153	107, 277
42162	72, 131, 271
42170	71, 268
42180	70, 71, 269
42282	69, 272
42292	69, 272
42302	69, 272
42312	69, 272
42343	69, 266
43022	280
43022-5	280
43040	70, 131, 267
43050	270
43074	72, 274
43100	132, 279
43120	72, 274
43144	274
43150	70, 150, 266
43152	70, 150, 266
43153	70, 150, 266
43160	71, 150, 268
43162	71, 268
43163	71, 150, 268
43172	107, 278
43220	107, 132, 278
43222	107, 132, 278
43223	107, 132, 278
43253	106, 131, 151, 275
43262-5	280
43272	281

Model No.	*Page*
43272-5	281
43282	279
43292	279
43300	184, 281
43325	280
43343	106, 275
43362	107, 132, 151, 278, 281
43380	72, 149, 271
43390	72, 149, 273
43411	291
43424	291
43512	71, 150, 269
43522	71, 150, 269
43532	70, 71, 150, 269
43540	280
43572	106, 131, 151, 276
43642	106, 132, 276
43652	188, 281
43655	106, 132, 276
43673	274
43684	245
43690	70, 71, 150, 269
43723	107, 132, 278
43732	106, 132, 277
43760	70, 71, 269
43780	72, 130, 149, 273
43783	72, 130, 149, 273
43790	72, 149, 273
43823	71, 268
43830	131, 272
43842	281
43850	72, 130, 149, 273
43901	291
43952	107, 132, 151, 278
43960	72, 131, 271
43962	72, 131, 271
43970	72, 149, 270
43980	72, 149, 270
44010	213
44030	213
44070	213
44090	211
44110	211
44134	208
44242	147
44380	147
44421	209
44440	147
44460	213
44530	212

Model No.	*Page*
44530-5	212
44540	212
44690	212
44700	212
44710	212
44720	212
44730	213
44810	211
44810-5	211
44820	211
44840-5	166
44850	212
44860	212
44890	211
44891	211
44892	212
44910	147
45002-5	43
45003-5	43
45012	59
45013	59
45022	43
45023	43
45042	41
45043	41
45062	38
45063	38
45072	41
45073	41
45092	46
45093	46
45162	44
45172	59
45173	59
45203	38
45232	46
45233	46
45252	48
45252-5	48
45253	48
45253-5	48
45262	50
45263	50
45282	30, 36
45283	30, 36
45302	30, 36
45303	30, 36
45322	43
45323	43
45333	64

Model No.	*Page*
45412	42
45412-5	42
45413	42
45413-5	42
45432	51
45433	51
45442	29, 58
45443	29, 58
45462	29, 57
45463	29, 57
45503	65
45512	48
45513	48
45573	52
45582	52
45583	52
45593	52
45603	52
45623	52
45633	52
45643	52
45662	54
45663	54
45712	54
45713	54
45763	53
45773	52
45793	52
45811	143
45812	41
45812-5	41
45813	41
45813-5	41
45821	121
45822	38
45822-5	38
45823	38
45823-5	38
45832	41
45833	41
45932	50
45933	50
45993	65
46003	63
46003-5	63
46072	29, 57
46073	29, 57
46082	29, 57
46083	29, 57
46092	58

Model No.	*Page*
46132	37
46133	37
46142	39
46143	39
46282	59
46283	59
46302	29, 57
46303	29, 57
46322	66
46323	66
46332	66
46333	66
46393	49
46393-5	49
46412	44
46412-5	44
46413	44
46413-5	44
46422-5	44
46423-5	44
46543	64
46543-5	64
46703	50
46712	50
46712-5	50
46713	50
46713-5	50
46740	46
46742	46
46743	46
46782	51
46783	51
46791	143
46792	51
46792-5	51
46793	51
46793-5	51
46823	63
46832	29, 56
46833	29, 56
46872	29, 56
46873	29, 56
46882	49
46882-5	49
46883	49
46883-5	49
46892	60
46892-5	60
46893	60
46893-5	60

 © 2019 All Rights Reserved, Grote® Industries, Inc.

MODEL NUMBER INDEX

Model No.	Page
46913	64
46933	48
46982-5	49, 112
46983-5	49, 112, 113
47012	43
47013	43
47052	49
47053	49
47063	64
47072	28, 55
47073	28, 55
47082	44
47083	44
47084	44
47092	45
47093	45
47102	39
47103	39
47112	37
47113	37
47122	39
47123	39
47162	28, 55
47163	28, 55
47183	63
47202	39
47212	38
47213	38
47222	42
47223	42
47232	40
47233	40
47242	47
47243	47
47252	53
47253	53
47262	53
47263	53
47322	39
47323	39
47332	37
47333	37
47362	47
47372	40
47373	40
47462	47
47463	47
47472	39
47473	39
47492	45
47493	45
47502	46
47503	46
47732	54
47733	54
47772	52
47773	52
47853-5	111
47913	53
47922	53
47923	53
47952	36
47952-5	36
47953	30, 36
47953-5	36
47962	30, 36
47963	30, 36
47972	31, 36
47973	31, 36
47982	30, 36
47983	30, 36
48072	216
48132	218
48272	216
48282	216
48283	219
48442	219
48522	217
48532	217
48552	218
49062	62
49072	63
49082	63
49112	62
49112-5	62
49122	61
49132	61
49142	60
49162	60
49172	61
49182	60
49192	62
49202	31, 61
49212-5	62
49223	62
49242-5	62
49252	47
49253	47
49262	32, 35
49263	32, 35
49281	32, 35
49282	32, 35
49283	32, 35
49322	32, 35
49322-5	35
49323	32, 35
49323-5	35
49332	32, 35
49333	32, 35
49341	32, 35
49342	32, 35
49343	32, 35
49351	32, 35
49352	32, 35
49353	32, 35
49362	33, 35
49363	33, 35
49372	31, 36
49373	31, 36
49382	31, 36
49383	31, 36
49392	28, 55
49393	28, 55
49412	32, 35
49413	32, 35
49452	32, 35
49453	32, 35
49460	31, 36
49501-3	170, 171
49511-3	170, 171
50132	103
50222	23, 80
50232	23, 81
50232-5	23, 81
50352	101
50502	23, 81
50630	101
50642	101
50820	22, 80
50852	97
50862	97
50872	97
50882	97
50892	97
50902	94
50912	94
50920	91
50972	95
50972-5	95
50992	94
51002	19, 79
51012	19, 79
51022	23, 80
51032	23, 80
51052	23, 79
51090	106, 132, 276
51962	111
51962-5	111
51972-5	111
51982	111
51982-5	111
51992	111
51992-5	111
52023	88
52063	88
52072	24, 83
52073	25, 83
52092	18, 75
52093	19, 75
52152	22, 78
52162	20, 76
52163	20, 76
52182	27, 86
52182-5	27, 86
52183	27, 86
52193	27, 87
52202	90
52203	90
52253	27, 87
52302	113
52302-5	113
52312	113
52312-5	113
52362	115
52372	115
52423	26, 87
52442	113
52452	113
52482	115
52492	115
52513	27, 87
52522	23, 81
52533	27, 87
52562	27, 85
52563	27, 85
52572	27, 85
52592-5	26, 85, 89
52602	96
52672	22, 78
52682	22, 78
52770	22, 78
52772	22, 78
52773	22, 78
52782	22, 78
52802	95
52812	95
52822	96
52832	96
52892	27, 85
52893	27, 85
52902	94
52912	94
52922	23, 79
52922-5	23, 79
52923	23, 79
52972	96
53000	100
53012	23, 79
53012-5	23, 79
53020	100
53023	100
53062	29, 88
53063	29, 88
53082-5	27, 114
53092	27, 86
53093	27, 86
53102	22, 78
53103	22, 78
53112	22, 78
53122	25, 83
53123	25, 83
53132	90
53133	90
53163	29, 88
53182	20, 76
53192	20, 76
53252	18, 75
53253	19, 75
53272	18, 75
53282	18, 75
53292	18, 75
53293	19, 75
53302	18, 75
53303	19, 75
53312	20, 76
53313	20, 76
53413	20, 76
53422	102
53432	19, 75
53462	19, 75

© 2019 All Rights Reserved, Grote® Industries, Inc.

MODEL NUMBER INDEX

Model No.	*Page*
53532	18, 75
53552	18, 75
53553	19, 75
53582	89
53592	24, 83
53593	25, 83
53622	24, 83
53630	91
53640	91
53650	91
53662	112
53672	112
53702	92
53712	92
53722	93
53762	93
53782	93
53792	93
53883	102
53962	24, 83
53963	25, 83
53972	24, 83
53973	25, 83
54002	28, 89
54003	28, 56, 89
54012	29, 88
54032	18, 75
54042	19, 75
54132	25, 83
54133	25, 83
54142	25, 83
54143	25, 83
54162	26, 84
54163	26, 84
54172	26, 84
54173	26, 84
54183	25, 86
54193	25, 86
54203	25, 86
54213	25, 86
54223	86
54233	86
54243	25, 86
54253	25, 86
54263	25, 86
54282	21
54292	19
54302	19
54313	19
54332	19, 77
54333	20, 77
54342	21, 78
54342-5	78
54343	21, 78
54362	19, 77
54363	20, 77
54472	19, 77
54482	19, 77
54492	19, 77
54493	20, 77
54562	20, 76
54573	19
54593	58
54602	19, 77
54622	18, 75
54643	20, 77
54663	58
54672	24, 82
54682	24, 82
54702	24, 82
54722	24, 82
54752	24, 82
54762	24, 82
54792	83
54802	24, 83
55103	20, 76
55162	18, 76
55202	18, 76
55212	18
55220	101
55223	101
55280	100
55290	100
55340	99
55410	99
55420	99
55450	99
55460	99
55470	98
55982	102
55983	102
55992	102
55993	102
56000	100
56020	100
56072	103
56073	103
56083	103
56150	98
56160	98
56170	98
56180	98
60001	122
60011	122
60011-5	122
60081	122
60101	145
60101-5	145
60121	122
60151	146
60151-5	146
60191	121
60251	145
60251-5	145
60261	121
60271	142
60280	121
60291	121
60301	142
60311	128
60321	120
60331	29, 120
60341	120
60351	143
60361	144
60381	120
60411	142
60421	142
60460	121
60481	146
60561	143
60571	144
60581	140
60591	140
60631	20, 122
60651	33, 119
60661	33, 119
60671	33, 119
60681	33, 119
60691	33, 119
60701	33, 119
60711	33, 119
60721	33, 119, 144
60721-5	119
60781	33, 119
60824	33, 37
60831	33, 35
60861	33, 119
61031	136
61051	23, 139
61091	139
61111	135
61121	138
61141	138
61161	139
61171	137
61221	141
61261	135
61281	140
61291	135
61301	141
61451	23, 139
61491-5	141
61501	146
61501-5	146
61611	135
61793	140
61811	139
61821	139
61851	138
61851-5	138
61861	136
61871	136
61881	135
61931	136
61991	136
62011	127
62021	127
62051	26, 125
62091	20, 124
62101	20, 124
62121	22, 124
62151	127
62171	22, 124
62181	23, 124
62211	22, 123
62231	27, 126
62251	27, 126
62271	22, 123
62291	128
62321	22, 124
62331	22, 123
62381	127
62391	20, 123
62401	20, 123
62521	27, 126
62561	25, 125
62571	20, 123
62591	25, 125
62601	25, 125
62691	21, 124
62751	26, 126
62791	20, 124
63151-5	186
63171-5	186
63181-5	187
63241-5	186
63251-5	187
63391	163
63451-4	163
63531	164
63551	184
63561	19, 186
63571	177
63581	177
63591	177
63601	176
63601-5	176
63602	176
63610	176
63611	176
63611-5	176
63621	176
63621-5	176
63731	176
63741	176
63741-5	176
63751	176
63751-5	176
63821	179, 184
63821-5	179
63831	179, 184
63831-5	179
63861	179
63861-5	179
63871	179
63871-5	179
63921	185
63941	185
63971	179
63981	172
63981-5	172
63991	172
63991-5	172
64021	185
64101	184
64111	184
64241	162
64251	162
64261-4	162

 © 2019 All Rights Reserved, Grote® Industries, Inc.

MODEL NUMBER INDEX

Model No.	Page
64291-4	162
64341	185
64371-5	164
64441	184
64471	185
64611	186
64890	186
64891	186
64901	187
64921	184
64930	184, 282
64931	184
64931-5	184
64940	185
64941	185
65202	45
65203	45
65230-5	112
65300-5	115
65320-5	111
65330-5	111
65370-5	113
65380-5	113
65390-5	114
65402-4	23, 116
65432-4	19, 115
65440-5	112
65512	47
65513	47
65720-5	116
65730-5	116
65880-5	111
66071	246
66100	249
66101	249
66110	249
66111	67, 260
66113	249, 251
66121	250
66122	249
66123	249
66124	249
66125	249
66133	250
66135	251
66145	250
66150	251
66151	251
66152	251
66153	251
66154	251
66155	251
66160	249
66161	249
66162	249
66163	249
66164	250
66165	251
66170	248
66171	250
66190	249
66200	250
66203	237, 239, 241
66220	250
66221	237, 239, 241, 250
66222	237, 239, 241, 250
66223	248
66224	248
66360	68, 257
66402	237, 239
66403	241
66601	237
66650	205
66660	205
66670	205
66705	246
66800	67, 129, 148, 256
66801	67, 129, 148, 256
66810	105, 261
66811	104, 130, 259
66812	104, 130, 259
66813	105, 261
66814	105, 261
66815	68, 104, 258
66816	68, 104, 129, 258
66820	105, 262
66823	105, 262
66825	104, 259
66826	261
66830	104, 262
66831	104, 262
66836	104, 262
66840	67, 129, 148, 256
66841	68, 104, 258
66842	104, 130, 148, 258
66843	104, 259
66844	104, 259
66845	68, 104, 258
66846	104, 130, 148, 259
66850	67, 129, 148, 256
66851	67, 129, 148, 256
66860	105, 262
66861	105, 188, 261
66862	105, 261
66863	105, 262
66864	105, 262
66865	105, 262
66870	67, 258
66900	68, 257
66902	68, 257
66904	68, 257
66905	68, 257
66910	68, 129, 257
66911	68, 129, 257
66930	67, 256, 265
66931	67, 256
66932	67, 260
66980	67, 129, 148, 256
66981	67, 129, 148, 256
66982	67, 129, 148, 256
67000	104, 130, 259
67001	67, 129, 148, 256
67002	68, 104, 258
67005	68, 104, 258
67006	105, 262
67010	105, 130, 148, 260
67011	105, 130, 148, 260
67013	104, 130, 148, 258
67014	105, 130, 148, 260
67016	104, 130, 148, 259
67020	105, 130, 148, 260
67050	67, 129, 148, 256
67050-5	67, 129, 148, 256
67070	68, 129, 257
67071	68, 129, 257
67090	104, 259
67090-5	104, 259
67120	149, 257
67250	248
67260	248
67271	248
67301	248
67570	247
67571	247
67580	247
67581	247
67760	180
68010	188, 260
68020	260
68030	260
68060	260
68130	263
68150	263
68170	149, 263
68380	263
68420	117
68540-5	117
68580	188, 260
68630	159, 160
68680	261
69680	217
69690	217
71152	293
71422	292
71440	293
72010-5	208
72100-5	208
72110-5	208
73030	207
73040	206
73040-5	206
73070	207
73080	207
73090	206
73110	206
73140-5	208
73150-5	208
73160	207
73170	207
73220	207
73240	206
73250	206
73310	207
73350	206
73360	206
73370	206
76033	198
76083	197
76203	198
76223	198
76253	192
76263	192
76683	193
76685	193
76693	193
76770	200
76792	203
76793	203
76793-5	203
76795	203
76943	200
76953	200
76980	200
76983	200
76985	200
76993	200
77012	196
77013	196
77101	196
77102	196
77103	196
77105	196
77193	20, 203
77203	197
77223	200
77351	20, 204
77352	20, 204
77353	20, 204
77355	20, 204
77361	204
77362	204
77363	204
77365	204
77461	202
77462	202
77463	202
77465	202
77473	195
77483	195
77803	200
77813	194
77823	194
77833	194
77843	194
77912	197
77913	197
77923	197
77931	202
77933	202
77953	192
77963	192
78003	103
78010	191
78011	191
78013	191
78015	191
78020	199
78023	199
78024	199
78025	199

© 2019 All Rights Reserved, Grote® Industries, Inc.

MODEL NUMBER INDEX

Model No.	Page
78030	192
78031	192
78032	192
78033	192
78034	192
78035	192
78041	192
78043	192
78045	192
78050	192
78051	192
78052	192
78053	192
78054	192
78055	192
78061	194
78063	194
78065	194
78070	193
78071	193
78075	193
78080	193
78081	193
78085	193
78091	195
78092	195
78093	195
78094	195
78095	195
78101	195
78102	195
78103	195
78104	195
78105	195
78113	196
78122	195
78123	195
78125	195
78130	199
78133	199
78135	199
78140	201
78141	201
78142	201
78143	201
78144	201
78145	201
78146	201
78153	102
78161	201
78162	201
78163	201
78163-1	201
78164	201
78165	201
78190	204
78191	204
78193	204
78194	204
78195	204
78200	205
78210	205
78270	205
78303	103
78313	103
78333	38
78343	41
78363	29, 56
78370	205
78380	205
78393	46
78403	28, 55
78410	205
78423	39
78433	37
78443	199
78453	47
78460	201
78460-5	201
78513	201
78563	203
78573	203
78851	194
78853	194
78855	194
78861	194
78863	194
78865	194
79033	202
79033-5	202
79043	200
79053	199
79060	199
79070	191
79071	191
79073	191
79074	191
79075	191
79080	201
79093	193
79100	201
79110	201
79120	201
79133	199
79143	199
79153	199
82080	136
84611-5	163
84621-5	163
84631-5	162
84641-5	162
84651-4	163
84661-4	162
87020	243
87023	243
87100	243
87101	243
87103	243
87104	243
87105	243
87110	243
87111	243
87112	243
87141	244
87151	244
87170	243
87171	243
87172	243
87173	243
87180	243
87181	243
87182	243
87190	243
87191	243
87192	243
87193	243
87210	246
87211	246
87212	246
87214	246
87215	246
87220	244
87240	244
87250	244
87270	244
87590	245
87830	245
87860	244
90011	133
90012	108
90013	108
90062	73
90063	73
90072	73
90073	73
90103	108
90122	73
90123	73
90152	73
90153	73
90162	73
90163	73
90172	73
90173	73
90202	73
90203	73
90221	133
90232	108
90233	108
90252	108
90303	73
90342	117
90353	209
90373	209
90401	151
90482	108
90483	108
90652	115, 117
90762	108
90922	73
90923	73
90941-5	159
90951-5	160
90971-5	166
91042	73
91043	73
91051	166
91112	117
91113	117
91122	117
91302	108
91380	72, 149, 270
91400	71, 150, 267
91410	71, 150, 267
91482	108
91502	108
91503	108
91513	108
91572	73
91573	73
91581	108, 133
91582	108
91583	108
91683	73
91740	106, 131, 151, 274
91880	71, 150, 267
91890	71, 150, 268
91950	106, 131, 275
91961	151
91962	73
91963	73
91964	73
92062	108
92063	108
92070	71, 150, 267
92120	70, 150, 266
92150	70, 150, 266
92183	73
92193	73
92420	107, 132, 151, 277
92432	73
92433	73
92510	106, 131, 132, 151, 275
92511	106, 131, 151, 275
92512	106, 131, 151, 275
92513	106, 131, 151, 275
92583	273
92720	107, 132, 151, 277
92773	73
92792	117
92920	71, 267
93190	276
93400	271
93402	271
93453	273
93552	106, 131, 275
93553	106, 131, 275
93600	280
93610	122
93670	71, 268
93683	106, 131, 275
93750	71, 268
93760	70, 266
93803	69, 271
93982	279
94000	71, 267
94010	71, 267
94100	70, 150, 266
94110	277
94180	132, 279

 © 2019 All Rights Reserved, Grote® Industries, Inc.

MODEL NUMBER INDEX

Model No.	Page
94233	72, 270
94350	69, 273
94360	69, 106, 107, 265
94401-5	161
94411-5	161
94421-5	161
94450	188
94690	188, 282
97942	202
97943	202
98130	282
98160	180
98171	209
98173	209
98175	209
98221	209
98223	209
98225	209
98251	209
98253	209
98255	209
98271	209
98281	209
98282	209
98283	209
98284	209
98285	209
98293	209
98311	209
98313	209
98314	209
98315	209
98333	205
98350	283
98360	283
98373	209
98383	209
98390	283
98400	283
98410	283
98460	282
98470	282
98480	283
98513	193, 209
98522	205
99170	292
99170-1	292
99170-GT	292
99180	292
99460-5	116
99500-3	248
99501-3	248
99510	244, 245
99580	291
99593	106, 277
99595	106, 277
99630	208, 244
99680	244, 245
99802	73
99803	73
99842	108
99843	108
99912	73, 108
99913	73
BZ101-5	183
BZ111-5	183
BZ201-5	183
BZ301-5	183
BZ401-5	182
BZ501-5	182
BZ511-5	182
BZ551-5	183
BZ601-5	183
BZ701	182
BZ702	182
BZ703	182
BZ705	182
BZ801-5	182
BZ901-5	182
G1002	40
G1003	40
G1032	40
G1032-5	40
G1033	40
G1033-5	40
G1042	40
G1043	40
G1082	42
G1083	42
G1092	41
G1093	41
G1502	44
G1503	44
G1902	45
G1902-5	45
G1903	45
G2102	29, 55
G2103	29, 55
G3002	37
G3002-5	37
G3003	37
G3003-5	37
G3092	38
G3093	38
G4002	21, 77
G4002-5	21, 77
G4003	21, 77
G4012	21, 77
G4022	21, 77
G4023	21
G4502	90
G4503	90
G4602	51
G4602-5	51
G4603	51
G4603-5	51
G5052	65
G5053	65
G5053-5	65
G5082	92
G5082-5	92
G5092	92
G5092-5	92
G5202	92
G5212	92
G5300	100
G5530	98
G5540	98
G5543-5	98
G6002	26, 84
G6002-5	26, 84
G6003	26, 84
G6012	26, 84
G6013	26, 84
G6121	145
G6121-5	145
G6131	145
G6131-5	145
G6151	146
G6151-5	146
G6261	144
G6261-5	144

© 2019 All Rights Reserved, Grote® Industries, Inc.

MULTI-VOLT AND NON 12-VOLT PRODUCT INDEX

Model No.		Page
61E91	24V	140
61F30	10-32V	136
63E23	12/24V	172
63E41	12/24V	177
63E51	12/24V	177
63E71	24V	177
63F31	24V	173
63F51	24V	173
63F61	24V	173
63F81	12/24V	174
63F81-5	12/24V	174
63F91	12/24V	174
63G01	12/24V	174
63G11	12/24V	174
63H01	12/24V	179
63H11	12/24V	179
63H31	48V	172
63H81	12/24V	179
63J01	12/24V	175
63J11	12/24V	175
63J21	12/24V	175
63J31	12/24V	175
63W01	9-32V	173
63W11	9-32V	173
63W21	9-32V	173
63W31	9-32V	173
63W41	12-32V	173
63W61	12-32V	173
63W71	12-32V	173
63Z61	14-32V	177
63Z71	14-32V	177
63Z81	14-32V	177
64E01	10-48V	178
64E01-5	10-48V	178
64E11	10-48V	178
64F11	10-48V	178
64F71	24V	178
64G01	10-48V	178
64G01-5	10/48V	178
64G11	10/48V	178
64G11-5	10/48V	178
64G61	24V	178
64G71	24V	178
64H51-4	12-36V	163
64H51-5	12-36V	163
64H61-4	12-36V	163
64H61-5	12-36V	163

Model No.		Page
64H71-5	12-30V	159
64H81-5	12-30V	160
64J11	12/24V	180
64J21	12/24V	180
64J31	12/24V	180
64J61-5	12-30V	161
64J71-5	12-30V	161
64M11-5	12/24V	170
64M21-5	12/24V	171
44010	12-24V	213
44030	12-24V	213
44070	18-32V	213
44134	12-36V	208
44421	12-80V	209
44850	24V	212
44860	24V	212
45162	24V	44
47322	24V	39
47323	24V	39
47332	24V	37
47333	24V	37
47362	24V	47
47732	24V	54
47733	24V	54
49262	9-32V	35
49263	9-32V	35
49282	9-32V	35
49283	9-32V	35
49351	24V	35
49352	24V	35
49353	24V	35
52072	24V	83
52073	24V	83
52092	24V	75
52093	24V	75
52152	24V	78
52162	24V	76
52163	24V	76
56150	12/24V	98
56160	12/24V	98
56170	12/24V	98
56180	12/24V	98
60711	9-32V	119
61111	24V	135
61861	9-30V	136
62321	24V	124
62571	24V	123

Model No.		Page
63241-5	24V	186
63251-5	24V	187
63571	12/24V	177
63581	12/24V	177
63591	12/24V	177
63731	24V	176
63741	24V	176
63741-5	24V	176
63751	24V	176
63751-5	24V	176
63821	12/24V	179, 184
63821-5	12/24V	179
63831	12/24V	179
63831-5	12/24V	179
63861	12/24V	179
63861-5	12/24V	179
63871	12/24V	179
63871-5	12/24V	179
63971	12/24V	179
63981	12/24V	172
63981-5	12/24V	172
63991	12/24	172
63991-5	12/24V	172
64921	24V	184
73030	12-24V	207
73040	12-24V	206
73040-5	12-24V	206
73070	12-24V	207
73080	12-24V	207
73090	12-24V	206
73110	12-24V	206
73160	12-24V	207
73170	12-24V	207
73220	12-24V	207
73240	12-24V	206
73250	12-24V	206
73310	12-24V	207
73350	12-24V	206
73360	12-24V	206
73370	12-24V	206
76263	24V	192
76683	12-24V	193
76685	12-24V	193
76693	12-24V	193
76792	11-30V	203
76793	11-30V	203
76795	11-30V	203

Model No.		Page
77012	12-110V	196
77013	12-110V	196
77101	11-80V	196
77102	11-80V	196
77103	11-80V	196
77105	11-80V	196
77203	12-80V	197
77931	10-16V	202
77933	10-16V	202
77963	24V	192
78010	12-24V	191
78011	12-24V	191
78013	12-24V	191
78015	12-24V	191
78020	12-24V	199
78023	12-24V	199
78024	12-24V	199
78025	12-24V	199
78030	12-24V	192
78031	12-24V	192
78032	12-24V	192
78034	12-24V	192
78035	12-24V	192
78050	12-24V	192
78051	12-24V	192
78052	12-24V	192
78053	12-24V	192
78054	12-24V	192
78055	12-24V	192
78061	12-24V	194
78063	12-24V	194
78065	12-24V	194
78070	12-24V	193
78071	12-24V	193
78075	12-24V	193
78080	12-24V	193
78081	12-24V	193
78085	12-24V	193
78091	12-72V	195
78092	12-72V	195
78093	12-72V	195
78094	12-72V	195
78095	12-72V	195
78113	12-72V	196
78122	12-24V	195
78123	12-24V	195
78125	12-24V	195

Model No.		Page
78140	12-24V	201
78141	12-24V	201
78142	12-24V	201
78143	12-24V	201
78144	12-24V	201
78145	12-24V	201
78146	12-24V	201
78190	12-24V	204
78191	12-24V	204
78193	12-24V	204
78194	12-24V	204
78195	12-24V	204
78460	12-24V	201
78851	12-24V	194
78853	12-24V	194
78855	12-24V	194
79033	12-24V	202
79043	12-24V	200
79053	12-24V	199
79070	12-24V	191
79071	12-24V	191
79073	12-24V	191
79074	12-24V	191
79075	12-24V	191
79080	12-24V	201
79093	12-24V	193
79100	12-24V	201
79110	12-24V	201
79120	12-24V	201
84611-5	12-36V	163
84621-5	12-36V	163
84631-5	12-30V	162
84641-5	12-30V	162
84651-4	12-36V	163
84661-4	12-30V	162
90941-5	9-32V	159
90951-5	9-32V	160
91051	24V	166
94401-5	9-32V	161
94411-5	9-32V	161
94421-5	9-32V	161
BZ101-5	9-32V	183
BZ201-5	9-32V	183
BZ301-5	9-32V	183
BZ601-5	9-32V	183

Deutsch® is a registered trademark of TE Connectivity Corporation; Packard® is a registered trademark of DELPHI TECHNOLOGIES, INC.;

All product and company names are trademarks™ or registered® trademarks of their respective holders. Use of them does not imply any affiliation with or endorsement by them.

 © 2019 All Rights Reserved, Grote® Industries, Inc.

PRODUCT / CUSTOMER NOTES:

© 2019 All Rights Reserved, Grote® Industries, Inc.

PRODUCT / CUSTOMER NOTES:

 © 2019 All Rights Reserved, Grote® Industries, Inc.

PRODUCT / CUSTOMER NOTES:

© 2019 All Rights Reserved, Grote® Industries, Inc.

PRODUCT / CUSTOMER NOTES:

 © 2019 All Rights Reserved, Grote® Industries, Inc.

PRODUCT / CUSTOMER NOTES:

© 2019 All Rights Reserved, Grote® Industries, Inc.

53252

4" ROUND PLATFORM

The 4" platform is used in a variety of trucks, trailers, agriculture, and construction equipment. The Grote® 4" line sets the standard and has a wide range of products to meet your needs: reliability, style, or value.

HARD SHELL

MALE PIN

PL3 (FEMALE PIN)

4" LED STOP/TAIL/TURN WITH INTEGRATED BACK-UP LAMPS

Part Number	Description	Connector	Voltage (nominal)	Current Draw	Flange Color	Regulations / Standards
55162	Red, Grommet Mount	Hard Shell	12V	S: .185A, T: .19A, B/U: .306A	NA	FMVSS 108 / SAE I,S,T, R2
55202	Red, Theft Resistant Flange	Hard Shell	12V	S: .185A, T: .19A, B/U: .306A	Stainless Steel	FMVSS 108 / SAE I,S,T, R2
55212	Red, Theft Resistant Flange	Hard Shell	12V	S: .185A, T: .19A, B/U: .306A	Gray PC	FMVSS 108 / SAE I,S,T, R2

SUPERNOVA® 4" LED LAMPS

Part Number	Description	Connector	Voltage (nominal)	Current Draw	Diode Layout	Regulations / Standards
53252	Red, Grommet Mount	Male Pin	12V	S,I: .24A, T: .03A	10	FMVSS 108 / SAE I,S,T, P2
53552	Red, Grommet Mount	Hard Shell	12V	S,I: .24A, T: .03A	10	FMVSS 108 / SAE I,S,T, P2
53532	Red, Grommet Mount	Hard Wire	12V	S,I: .24A, T: .03A	10	FMVSS 108 / SAE I,S,T, P2
52092	Red, Grommet Mount	Male Pin	24V	S,I: .12A, T: .015A	10	FMVSS 108 / SAE I,S,T, P2
53272	Red, Integrated Gray Flange	Male Pin	12V	S,I: .24A, T: .03A	10	FMVSS 108 / SAE I,S,T, P2
53282	Red, Integrated White Flange	Male Pin	12V	S,I: .24A, T: .03A	10	FMVSS 108 / SAE I,S,T, P2
53292	Red, Integrated Black Flange	Male Pin	12V	S,I: .24A, T: .03A	10	FMVSS 108 / SAE I,S,T, P2
53302	Red, Integrated Stainless Steel Flange	Male Pin	12V	S,I: .24A, T: .03A	10	FMVSS 108 / SAE I,S,T, P2
54622	Red, Integrated Red Flange	Male Pin	12V	S,I: .24A, T: .03A	10	FMVSS 108 / SAE I,S,T, P2
54032	Red, Integrated Gray Flange	Hard Shell	12V	S,I: .24A, T: .03A	10	FMVSS 108 / SAE I,S,T, P2

 © 2019 All Rights Reserved, Grote® Industries, Inc.

55162

55202

51002

53303

54622

54602

54492

54313

54332

53292

63561

SUPERNOVA® 4" LED LAMPS (CONTINUED)

Part Number	Description	Connector	Voltage (nominal)	Current Draw	Diode Layout	Regulations / Standards
54042	Red, Integrated Stainless Steel Flange	Hard Shell	12V	S,I: .24A, T: .03A	10	FMVSS 108 / SAE I,S,T, P2
53462	Red, Kit (Grommet + Pigtail + Lamp)	Male Pin	12V	S,I: .24A, T: .03A	10	FMVSS 108 / SAE I,S,T, P2
53432	Red, Kit (Stainless Flange + Pigtail + Lamp)	Male Pin	12V	S,I: .24A, T: .03A	10	FMVSS 108 / SAE I,S,T, P2
65432-4	Red, Heavy Duty Magnetic Towing Kit	Round 4 Pole Plug	12V	S,I: .48A, T: .06A	10	FMVSS 108 / SAE I,S,T, P2
53253	Yellow, Grommet Mount	Male Pin	12V	P2: .15A	10	FMVSS 108 / SAE P2
53553	Yellow, Grommet Mount	Hard Shell	12V	P2: .15A	10	FMVSS 108 / SAE P3
52093	Yellow, Grommet Mount	Male Pin	24V	P2: .12A	10	FMVSS 108 / SAE P2
53293	Yellow, Integrated Black Flange	Male Pin	12V	P2: .15A	10	FMVSS 108 / SAE P2
53303	Yellow, Integrated Stainless Steel Flange	Male Pin	12V	P2: .15A	10	FMVSS 108 / SAE P2
63561	White, Integrated Rubber Housing, Utility	Hardwire	12V	.6A	10	NA
54302	Red, Grommet Mount	Male Pin	12V/24V	13.5V S,I: .09A , T: .01A / 28V S,I; .05A, T: .01A	3	FMVSS 108 / SAE I,S,T, P2
54332	Red, Grommet Mount	Male Pin	12V	S,I: .15A, T: .01A	3	FMVSS 108 / SAE I,S,T, P2
54472	Red, Integrated Gray Flange	Male Pin	12V	S,I: .15A, T: .01A	3	FMVSS 108 / SAE I,S,T, P2
54482	Red, Integrated Black Flange	Male Pin	12V	S,I: .15A, T: .01A	3	FMVSS 108 / SAE I,S,T, P2
54492	Red, Integrated Stainless Steel Flange	Male Pin	12V	S,I: .15A, T: .01A	3	FMVSS 108 / SAE I,S,T, P2
54602	Red, Integrated Flange with Gasket	Male Pin	12V	S,I: .15A, T: .01A	3	FMVSS 108 / SAE I,S,T, P2
54292	Red, Grommet Mount	Hard Shell	12V/24V	13.5V S,I: .09A , T: .01A / 28V S,I; .05A, T: .01A	3	FMVSS 108 / SAE I,S,T, P2
54362	Red, Grommet Mount	Hard Shell	12V	S,I: .15A, T: .01A	3	FMVSS 108 / SAE I,S,T, P2
54573	Yellow, Integrated Flange	Hard Shell	12V/24V	13.5V S,I: .09A , T: .01A / 28V S,I; .05A, T: .01A	3	FMVSS 108 / SAE I,S,T, P2
51002	Red, Power Module, RH	UBS .180	12V	S,I: .24A , P2:.06A, T: .03A	3	FMVSS 108 / SAE A, I, P2, S, T
51012	Red Power Module, LH	UBS .180	12V	S,I: .24A, P2: .06A, T: .03A	3	FMVSS 108 / SAE A, I, P2, S, T
54313	Yellow, Grommet Mount	Hard Shell	12V	I6: .35A, P3,P: .043	3	FMVSS 108 / SAE I6, P, P3

© 2019 All Rights Reserved, Grote® Industries, Inc.

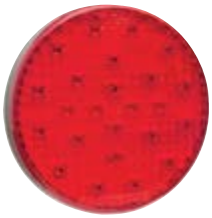
53312

53182

62401

60631

62091

77353

54493

77355

77193

SUPERNOVA® 4" LED LAMPS (CONTINUED)

Part Number	Description	Connector	Voltage (nominal)	Current Draw	Diode Layout	Regulations / Standards
54333	Yellow, Grommet Mount	Male Pin	12V	I: .15A	3	FMVSS 108 / SAE P2
54493	Yellow, Integrated Stainless Steel Flange	Male Pin	12V	I: .15A	3	FMVSS 108 / SAE P2
54363	Yellow, Grommet Mount	Hard Shell	12V	I: .15A	3	FMVSS 108 / SAE P2
54643	Yellow, Grommet Mount, 2 Pin	Male Pin	12V	I,T: .16A	3	FMVSS 108 / SAE T
62091	White, Dual System Back-Up	Male Pin	12V	.55A	3	FMVSS 108 / SAE (2) R
62101	White, Dual System Back-Up	Hard Shell	12V	.55A	3	FMVSS 108 / SAE (2) R
62791	White, Dual System Back-Up, Integrated Flange w/ Gasket	Male Pin	12V	.55A	3	FMVSS 108 / SAE (2) R
60631	White, Integrated Clear Flange w/Gasket Hook-up	Male Pin	12V	.5A	3	NA
53312	Red, Grommet Mount	Male Pin	12V	S, I: .48A , P2, T: .04A	24	FMVSS 108 / SAE I, P2, S, T
52162	Red, Grommet Mount	Male Pin	24V	S,I: .2A P2, T: .02A	24	FMVSS 108 / SAE I, P2, S, T
54562	Red, Grommet Mount	Hard Shell	12V	S, I: .48A , P2, T: .04A	24	FMVSS 108 / SAE I, P2, S, T
53182	Red, Integrated Black Flange	Male Pin	12V	S, I: .48A , P2, T: .04A	24	FMVSS 108 / SAE I, P2, S, T
53192	Red, Integrated Stainless Steel Flange	Male Pin	12V	S, I: .48A , P2, T: .04A	24	FMVSS 108 / SAE I, P2, S, T
53413	Yellow, Grommet Mount	Male Pin	12V	I: .71A P2: .14A	24	FMVSS 108 / SAE I, P2
52163	Yellow, Grommet Mount	Male Pin	24V	I: .34A, P2: .06A	24	FMVSS 108 / SAE I, P2
53313	Yellow, Grommet Mount	Male Pin	12V	I: 1.06A, P,P2: .13A	24	FMVSS 108 / SAE I, P, P2
55103	Yellow, Grommet Mount, 2 Pin	Male Pin	12V	I: .71A, P2; .14A	24	FMVSS 108 / SAE I, P2
62401	White, Single System Back-Up	Male Pin	12V	.6A	24	FMVSS 108 / SAE R
62391	White, Dual System Back-Up	Male Pin	12V	.25A	24	FMVSS 108 / SAE (2) R
62571	White, Dual System Back-Up	Male Pin	24V	.15A	24	FMVSS 108 / SAE (2) R
77351	White, Grommet Mount, Strobe	Male Pin	12V	.25A	24	NA
77352	Red, Grommet Mount, Strobe	Male Pin	12V	.25A	24	SAE Class II
77353	Yellow, Grommet Mount, Strobe	Male Pin	12V	.25A	24	SAE Class II
77355	Blue, Grommet Mount, Strobe	Male Pin	12V	.25A	24	SAE Class III
77193	Yellow, Integrated Rubber Housing, Strobe	UBS .180	12V	.25A	24	SAE Class II

 © 2019 All Rights Reserved, Grote® Industries, Inc.

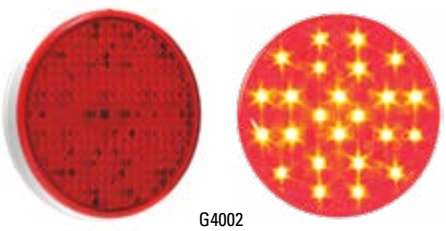
G4002

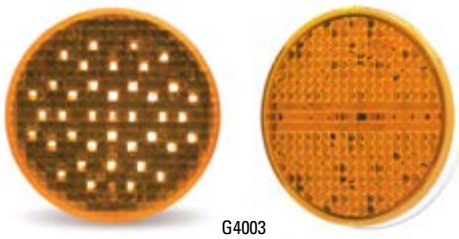
G4003

G4022

62691

54342

G4012

HI COUNT® 4" LED LAMPS

Part Number	Description	Connector	Voltage (nominal)	Current Draw	Diode Layout	Regulations / Standards
G4002	Red, Grommet Mount	PL3	12V	S, I: .48A, P2, T: .04A	24	FMVSS 108 / SAE I, P2, S, T
G4002-5	Red, Grommet Mount, Retail Pack	PL3	12V	S, I: .48A, P2, T: .04A	24	FMVSS 108 / SAE I, P2, S, T
G4022	Red, Clear Lens, Grommet Mount	PL3	12V	S, I: .48A, P2, T: .04A	24	FMVSS 108 / SAE I, P2, S, T
G4023	Yellow, Clear Lens, Grommet Mount	PL3	12V	I: .71A	39	FMVSS 108 / SAE I
G4012	Red, Grommet Mount Kit (Pigtail + Grommet + Lamp)	PL3	12V	S, I: .48A, P2, T: .04A	24	FMVSS 108 / SAE I, P2, S, T
G4003	Yellow, Grommet Mount	PL3	12V	I: .71A	39	FMVSS 108 / SAE I

GROTE SELECT® 4" LED LAMPS

Part Number	Description	Connector	Voltage (nominal)	Current Draw	Diode Layout	Regulations / Standards
54342	Red, Grommet Mount	PL3	12V	S, I: .24A, P2, T: .03A	3	FMVSS 108 / SAE I, P2, S, T
54282	Red, Grommet Mount, Multi-Volt	PL3	12V/24V	9V S, I: .92A , T: .089A / 32V S, I; .478A, T: .103A	3	FMVSS 108 / SAE I, P2, S, T
54343	Yellow, Grommet Mount	PL3	12V	P2: .03A	3	FMVSS 108 / SAE P2
62691	White, Dual System Back-up	PL3	12V	.55A	3	FMVSS 108 / SAE (2)R

© 2019 All Rights Reserved, Grote® Industries, Inc.

62121

52672

53103

50820

62271

53102

INCANDESCENT 4" LAMPS

Part Number	Description	Connector	Voltage (nominal)	Current Draw	Branding	Regulations / Standards
53102	Red, Grommet Mount	Male Pin	12V	S, I: 2.1A, P2, T: .48A	Torsion Mount® II	FMVSS 108 / SAE S, I, P2, T
53112	Red, Grommet Mount Kit (Pigtail, Grommet, Lamp)	Male Pin	12V	S, I: 2.1A, P2, T: .48A	Torsion Mount® II	FMVSS 108 / SAE S, I, P2, T
52770	Red, Clear Housing, Grommet Mount	PL3	12V	S, I: 2.1A, P2, T: .48A	Torsion Mount® II	FMVSS 108 / SAE S, I, T
52772	Red, Grommet Mount	PL3	12V	S, I: 2.1A, P2, T: .48A	Torsion Mount® II	FMVSS 108 / SAE S, I, P2, T
52152	Red, Grommet Mount	PL3	24V	S, I: 2.1A, P2, T: .48A	Torsion Mount® II	FMVSS 108 / SAE S, I, P2, T
52782	Red, Grommet Mount Kit (Pigtail + Grommet + Lamp)	PL3	12V	S, I: 2.1A, P2, T: .48A	Torsion Mount® II	FMVSS 108 / SAE S, I, P2, T
53103	Yellow, Grommet Mount	Male Pin	12V	I: 2.1A, P: .48A	Torsion Mount® II	FMVSS 108 / SAE I, P
52773	Yellow, Grommet Mount	PL3	12V	I: 2.1A, P: .48A	Torsion Mount® II	FMVSS 108 / SAE I, P
52672	Red, Grommet Mount with Built-In Reflector	PL3	12V	S, I: 2.1A, P2, T: .48A	Torsion Mount II	FMVSS 108 / SAE S, I, P2, T
52682	Red, Grommet Mount with Built-In Reflector Kit (Pigtail, Grommet, Lamp)	PL3	12V	S, I: 2.1A, P2, T: .48A	Torsion Mount® II	FMVSS 108 / SAE S, I, P2, T
50820	Red, Power Module (Back-up + License Lamp + 2 STT)	PL3	12V	Multiple Functions	Torsion Mount® II	FMVSS 108 / SAE A, I, L, R, T
62211	White, Single System Back-up	Male Pin	12V	2.1A	Torsion Mount II	FMVSS 108 / SAE R
62271	White, Single System Back-up	PL3	12V	2.1A	Torsion Mount® II	FMVSS 108 / SAE R
62331	White, Single System Back-up Kit (Pigtail + Grommet + Lamp)	PL3	12V	2.1A	Torsion Mount® II	FMVSS 108 / SAE R
62121	White/Frosted, Dual System Back-up	Male Pin	12V	2.1A	Torsion Mount® II	FMVSS 108 / SAE (2)R
62171	White/Frosted, Dual System Back-up	PL3	12V	2.1A	Torsion Mount® II	FMVSS 108 / SAE (2)R
62321	White/Frosted, Dual System Back-up	PL3	24V	2.1A	Torsion Mount® II	FMVSS 108 / SAE (2)R

 © 2019 All Rights Reserved, Grote® Industries, Inc.

65402-4

61451

50502

50222

51052

52922

52923

52522

50232

INCANDESCENT 4" LAMPS (CONTINUED)

Part Number	Description	Connector	Voltage (nominal)	Current Draw	Branding	Regulations / Standards
62181	White/Frosted, Dual System Back-up Kit (Pigtail, Grommet, Lamp)	PL3	12V	2.1A	Torsion Mount® II	FMVSS 108 / SAE (2)R
61451	Clear, Grommet Mount Dome Lamp	Male Pin	12V	1.04A	Torsion Mount® II	NA
61051	Clear, Grommet Mount Dome Lamp	PL3	12V	1.04A	Torsion Mount® II	NA
52922	Red, Grommet Mount	PL3	12V	S, I: 2.1A, P2, T: .48A	Economy	FMVSS 108 / SAE S, I, P2, T
52922-5	Red, Grommet Mount, Retail Pack	PL3	12V	S, I: 2.1A, P2, T: .48A	Economy	FMVSS 108 / SAE S, I, P2, T
53012	Red, Grommet Mount Kit (Pigtail + Grommet + Lamp)	PL3	12V	S, I: 2.1A, P2, T: .48A	Economy	FMVSS 108 / SAE S, I, P2, T
53012-5	Red, Grommet Mount Kit (Pigtail + Grommet + Lamp), Retail Pack	PL3	12V	S, I: 2.1A, P2, T: .48A	Economy	FMVSS 108 / SAE S, I, P2, T
52923	Yellow, Grommet Mount, Front, Park & Turn	PL3	12V	I: 2.1A, P: .48A	Economy	FMVSS 108 / SAE I, P2
51052	Red, Power Module	UBS .180	12V	S, I: 2.1A, P2, T: .48A	Economy	FMVS: 108 A, S, I, P2, T
51022	Red, Power Module, RH	UBS .180	12V	S, I: 2.1A, T: .48A, P2: .54A	Economy	FMVSS 108 / SAE A, S, I P2, T
51032	Red, Power Module, LH	UBS .180	12V	S, I: 2.1A, T: .48A, P2: .54A	Economy	FMVSS 108 / SAE A, S, I P2, T
50222	Red, Double Contact, Integrated Black Housing	Hardwire	12V	S, I: 2.1A, P2, P3, T: .59A	Economy	FMVSS 108 / SAE S, I, P2, P3, T
50502	Red, Double Contact, Integrated Rubber Housing	Hardwire	12V	S, I: 2.1A, P2, P3, T: .59A	Economy	FMVSS 108 / SAE S, I, P2, P3, T
52522	Red, Double Contact, Integrated Stainless Steel Housing	Hardwire	12V	S, I: 2.1A, P2, P3, T: .59A	Economy	FMVSS 108 / SAE S, I, P2, P3, T
50232	Red, Double Contact, Integrated Black Painted Steel Housing	Hardwire	12V	S, I: 2.1A, P2, P3, T: .59A	Economy	FMVSS 108 / SAE S, I, P2, P3, T
50232-5	Red, Double Contact, Integrated Black Painted Steel Housing, Retail Pack	Hardwire	12V	S, I: 2.1A, P2, P3, T: .59A	Economy	FMVSS 108 / SAE S, I, P2, P3, T
65402-4	Red, Magnetic Towing Kit	Round 4 Pole Plug	12V	S, I: 4.2A, P2, T: .96A	Economy	FMVSS 108 / SAE S, I, P2, T

© 2019 All Rights Reserved, Grote® Industries, Inc.

53962

6" OVAL PRODUCT PLATFORM

HARD SHELL MALE PIN PL3 (FEMALE PIN)

The oval stop/tail/turn has a variety of uses and can be found on all manners of heavy-duty trucks, trailers and pull-behind toy trailers. Guaranteed performance with a wide variety of connection and mounting options to boot. The oval shape does double duty as not only a stop tail and turn but also a back-up lamp, dome lamp or in the case of the 4-in-1 a mashup of many lamps in one – stop, tail, turn and back-up.

6" LED STOP/TAIL/TURN WITH INTEGRATED BACK-UP LAMPS

Part Number	Description	Connector	Voltage (nominal)	Current Draw	Material	Regulations / Standards
54672	Red, Grommet Mount	Male Pin	12V	S, I: .13A, T: .17A, (2)R: .16A	Red - High Impact Acrylic; Clear - PC	FMVSS 108 / SAE I, S, T, (2)R
54682	Red, Grommet Mount	PL3	12V	S, I: .13A, T: .17A, (2)R: .16A	Red - High Impact Acrylic; Clear - PC	FMVSS 108 / SAE I, S, T, (2)R
54702	Red, Grommet Mount	Hard Shell	12V	S, I: .13A, T: .17A, (2)R: .16A	Red - High Impact Acrylic; Clear - PC	FMVSS 108 / SAE I, S, T, (2)R
54722	Red, Grommet Mount, No Back-up	Hard Shell	12V	S, I: .13A, T: .17A	Red - High Impact Acrylic	FMVSS 108 / SAE I, S, T
54752	Red, Grommet Mount, No Back-up	Male Pin	12V	S, I: .13A, T: .17A	Red - High Impact Acrylic	FMVSS 108 / SAE I, S, T
54762	Red, Grommet Mount, No Back-up	PL3	12V	S, I: .13A, T: .17A	Red - High Impact Acrylic	FMVSS 108 / SAE I, S, T

SUPERNOVA® 6" OVAL LED LAMPS

Part Number	Description	Connector	Voltage (nominal)	Current Draw	Diode Layout	Regulations / Standards
53962	Red, Grommet Mount	Male Pin	12V	S, I: .48A, T: .06A	16	FMVSS 108 / SAE I, S, T, P2
52072	Red, Grommet Mount	Male Pin	24V	S, I: .24A, T: .03A	16	FMVSS 108 / SAE I, S, T, P2
53592	Red, Integrated Gray Flange	Male Pin	12V	S, I: .48A, T: .06A	16	FMVSS 108 / SAE I, S, T, P2
53622	Red, Integrated Black Flange	Male Pin	12V	S, I: .48A, T: .06A	16	FMVSS 108 / SAE I, S, T, P2
53972	Red, Integrated Stainless Steel Flange	Male Pin	12V	S, I: .48A, T: .06A	16	FMVSS 108 / SAE I, S, T, P2
54802	Red, Clear Lens, Grommet Mount	Hard Wire	12V	S, I: .48A, T: .06A	16	FMVSS 108 / SAE I, S, T, P2

 © 2019 All Rights Reserved, Grote® Industries, Inc.

54672 / 54682 / 54702

53973

54132 / 54142

54213

62561 / 62591 / 62601

54722 / 54752 / 54762

SUPERNOVA® 6" OVAL LED LAMPS (CONTINUED)

Part Number	Description	Connector	Voltage (nominal)	Current Draw	Diode Layout	Regulations / Standards
53122	Red, Grommet Mount Kit (Pigtail + Grommet + Lamp)	Male Pin	12V	S, I: .48A, T: .06A	16	FMVSS 108 / SAE I, S, T, P2
53963	Yellow, Grommet Mount	Male Pin	12V	P2: .48A	16	FMVSS 108 / SAE P2
52073	Yellow, Grommet Mount	Male Pin	24V	P2: .24A	16	FMVSS 108 / SAE P2
53593	Yellow, Integrated Gray Flange	Male Pin	12V	P2: .48A	16	FMVSS 108 / SAE P2
53973	Yellow, Integrated Stainless Steel Flange	Male Pin	12V	P2: .48A	16	FMVSS 108 / SAE P2
53123	Yellow, Grommet Mount Kit (Pigtail + Grommet + Lamp)	Male Pin	12V	P2: .48A	16	FMVSS 108 / SAE P2
54132	Red, Grommet Mount	Male Pin	12V	S, I: .14A, T: .02A	9	FMVSS 108 / SAE I, S, T, P2
54142	Red, Grommet Mount	Hard Shell	12V	S, I: .14A, T: .02A	9	FMVSS 108 / SAE I, S, T, P2
65390-4	Red, Light Duty Trailer Kit (Pigtail + Bracket + Grommet + Lamp x2)	Male Pin	12V	S, I: .48A, T: .06A		FMVSS 108 / SAE S, I , T
54133	Yellow, Grommet Mount	Male Pin	12V	S, I: .14A, T: .02A	9	FMVSS 108 / SAE P2
54143	Yellow, Grommet Mount	Hard Shell	12V	S, I: .14A, T: .02A	9	FMVSS 108 / SAE P2
54183	Yellow, Grommet Mount	Male Pin	12V	E, E2: .45A, P2: .06A	1	FMVSS 108 / SAE E, E2, P2
54193	Yellow, Grommet Mount	Hard Shell	12V	E, E2: .45A, P2: .06A	1	FMVSS 108 / SAE E, E2, P2
54253	Yellow, Integrated Black Theft Resistant Flange	Male Pin	12V	E, E2: .45A, P2: .06A	1	FMVSS 108 / SAE E, E2, P2
54263	Yellow, Integrated Stainless Steel Theft Resistant Flange	Male Pin	12V	E, E2: .45A, P2: .06A	1	FMVSS 108 / SAE E, E2, P2
54243	Yellow, Integrated Gray Theft Resistant Flange	Male Pin	12V	E, E2: .45A, P2: .06A	1	FMVSS 108 / SAE E, E2, P2
54203	Yellow, Integrated Yellow Housing Flange	Male Pin	12V	E, E2: .45A, P2: .06A	1	FMVSS 108 / SAE E, E2, P2
54213	Yellow, Integrated Yellow Housing Flange	Hard Shell	12V	E, E2: .45A, P2: .06A	1	FMVSS 108 / SAE E, E2, P2
62561	Clear, Grommet Mount, Single Back Up	Male Pin	12V	R: .30A	24	FMVSS 108 / SAE R
62601	Clear, Grommet Mount, Dual Back Up, Horizontal Mount	Male Pin	12V	(2) R: .30A	24	FMVSS 108 / SAE (2) R
62591	Clear, Grommet Mount, Dual Back Up, Vertical Mount	Male Pin	12V	(2) R: .30A	24	FMVSS 108 / SAE (2) R

© 2019 All Rights Reserved, Grote® Industries, Inc.

52592-5

54162

G6002

61G31

54173

62751

HI COUNT® LAMPS

Part Number	Description	Connector	Voltage (nominal)	Current Draw	Diode Layout	Regulations / Standards
G6002	Red, Grommet Mount	PL3	12V	S, I: .33A, P2, T: .015A	56	FMVSS 108 / SAE I, P2, S, T
G6002-5	Red, Grommet Mount, Retail Pack	PL3	12V	S, I: .33A, P2, T: .015A	56	FMVSS 108 / SAE I, P2, S, T
G6012	Red, Clear Lens, Grommet Mount	PL3	12V	S, I: .33A, P2, T: .015A	56	FMVSS 108 / SAE I, P2, S, T
G6003	Yellow, Grommet Mount	PL3	12V	P: .03A, T: .36A	56	FMVSS 108 / SAE P, T
G6013	Yellow, Clear Lens, Grommet Mount	PL3	12V	P: .03A, T: .36A	56	FMVSS 108 / SAE P, T

NEXGEN LAMPS

Part Number	Description	Connector	Voltage (nominal)	Current Draw	Diode Layout	Regulations / Standards
54162	Red, Grommet Mount	Male Pin	12V	S, I: .14A, P2, T: .02A	3	FMVSS 108 / SAE I6, P2, S, T
54163	Yellow, Grommet Mount	Male Pin	12V		3	FMVSS 108 / SAE P, P2
62051	Clear, Grommet Mount, Dual Back-up	Male Pin	12V	(2) R .30A	3	FMVSS 108 / SAE (2) R

GROTE SELECT® LED LAMPS

Part Number	Description	Connector	Voltage (nominal)	Current Draw	Diode Layout	Regulations / Standards
54172	Red, Grommet Mount	PL3	12V	S, I: .48A, P2, T: .04A	3	FMVSS 108 / SAE I6, P2, S, T
54173	Yellow, Grommet Mount	PL3	12V	I: .71A	3	FMVSS 108 / SAE I
62751	Clear, Grommet Mount, Dual Back-up	PL3	12V	(2) R .30A	3	FMVSS 108 / SAE (2) R

MISCELLANEOUS 6" OVAL LED LAMPS

Part Number	Description	Connector	Voltage (nominal)	Current Draw	Diode Layout	Regulatory / Standards
52592-5	Red, Chrome Trim Ring, Surface Mount	Hard Wire	12V	S, I: .22A, P2, T: .04A	10	FMVSS 108 / SAE I, S, T
52423	Yellow, LED Hybrid, Surface Mount	Packard®	12V	P2: .06A, E, E2: 2.1A	Hybrid	FMVSS 108 / SAE E, E2, P2
61G31	Clear, Grommet Mount Dome	Male Pin	12V	.6A	4	NA

 © 2019 All Rights Reserved, Grote® Industries, Inc.

62521

52182

52562

52533

62521

INCANDESCENT 6" LAMPS

Part Number	Description	Connector	Voltage (nominal)	Current Draw	Branding	Regulations / Standards
52562	Red, Grommet Mount	Male Pin	12V	S, I: 2.1A, P2, T: .59A	Torsion Mount® II	FMVSS 108 / SAE S, I, P2, T
52892	Red, Grommet Mount	PL3	12V	S, I: 2.1A, P2, T: .59A	Torsion Mount® II	FMVSS 108 / SAE S, I, P2, T
52572	Red, Grommet Mount Kit (Pigtail + Grommet + Lamp)	PL3	12V	S, I: 2.1A, P2, T: .59A	Torsion Mount® II	FMVSS 108 / SAE S, I, P2, T
52563	Yellow, Grommet Mount	Male Pin	12V	I: 2.1A, P: .48A	Torsion Mount® II	FMVSS 108 / SAE I, P
52893	Yellow, Grommet Mount Kit (Pigtail + Grommet + Lamp)	Male Pin	24V	I: 2.1A, P: .48A	Torsion Mount® II	FMVSS 108 / SAE I, P
52533	Yellow, Grommet Mount	Male Pin	12V	E: 2.1A, P2, P3: .59A	Torsion Mount® II	FMVSS 108 / SAE E, P2, P3
52513	Yellow, Grommet Mount	PL3	12V	E: 2.1A, P2, P3: .59A	Torsion Mount® II	FMVSS 108 / SAE E, P2, P3
62231	Clear, Grommet Mount Dual Back-up	PL3	12V	(2)R: 2.1A	Torsion Mount® II	FMVSS 108 / SAE (2) R
62251	Clear, Grommet Mount Kit (Pigtail + Grommet + Lamp)	PL3	12V	(2)R: 2.1A	Torsion Mount® II	FMVSS 108 / SAE (2) R
52182	Red, Grommet Mount	PL3	12V	S, I: 2.1A, P2, T: .59A	Economy	FMVSS 108 / SAE S, I, P2, T
52182-5	Red, Grommet Mount Retail Pack	PL3	12V	S, I: 2.1A, P2, T: .59A	Economy	FMVSS 108 / SAE S, I, P2, T
53092	Red, Grommet Mount Kit (Pigtail + Grommet + Lamp)	PL3	12V	S, I: 2.1A, P2, T: .59A	Economy	FMVSS 108 / SAE S, I, P2, T
53082-5	Red, Light Duty Trailer Kit (Pigtail + Bracket + Lamp x 2)	PL3	12V	S, I: 2.1A, P2, T: .59A	Economy	FMVSS 108 / SAE S, I, T
52183	Yellow, Grommet Mount	PL3	12V	I: 2.1A, P: .59A	Economy	FMVSS 108 / SAE I, P
53093	Yellow, Grommet Mount Kit (Pigtail + Grommet + Lamp)	PL3	12V	I: 2.1A, P: .59A	Economy	FMVSS 108 / SAE I, P
52193	Yellow, Grommet Mount	PL3	12V	E: 2.1A, P2: .48A	Economy	FMVSS 108 / SAE E, P2
52253	Yellow, Grommet Mount Kit (Pigtail + Grommet + Lamp)	PL3	12V	E: 2.1A, P2: .48A	Economy	FMVSS 108 / SAE E, P3
62521	Clear, Grommet Mount Dual Back-up	PL3	12V	(2) R: 2.1A	Economy	FMVSS 108 / SAE (2) R

© 2019 All Rights Reserved, Grote® Industries, Inc.

49393

TURTLEBACK® PLATFORM

MALE PIN

The Turtleback® lamp gets its name from the convex design of the lens which deflects limbs and other impacts. Now available in both incandescent and LED options, there is a TBII version for almost any trailer use, including dual-function auxiliary high-mount stop lights.

47162

54002

47073

SUPERNOVA® TURTLEBACK® LED LAMPS

Part Number	Description	Connector	Voltage (nominal)	Current Draw	Material	Regulations / Standards
47072	Red, Reflex Lens	Male Pin	12V	P2: .06A	Acrylic Lens, PC Housing	FMVSS 108 / SAE A, P2
47073	Yellow, Reflex Lens	Male Pin	12V	P2: .06A	Acrylic Lens, PC Housing	FMVSS 108 / SAE A, P2
47162	Red, Optic Lens	Male Pin	12V	P2, PC: .06A	PC Lens & Housing	FMVSS 108 / SAE P2, PC
49392	Red, Optic Lens	Hard Wire	12V	P2, PC: .06A	PC Lens & Housing	FMVSS 108 / SAE P2, PC
47163	Yellow, Optic Lens	Male Pin	12V	P2, PC: .06A	PC Lens & Housing	FMVSS 108 / SAE P2, PC
49393	Yellow, Optic Lens	Hard Wire	12V	P2, PC: .06A	PC Lens & Housing	FMVSS 108 / SAE P2, PC
78403	Yellow, ABS	Male Pin	12V	P2: .06A	PC Lens & Housing	FMVSS 108 / SAE P2
54002	Red, Optic Lens, Dual Intensity	Male Pin	12V	U: .25A, P2: .025A	PC Lens & Housing	FMVSS 108 / SAE U, P2
54003	Yellow, Optic Lens, Dual Intensity	Male Pin	12V	U: .25A, P2: .025A	PC Lens & Housing	FMVSS 108 / SAE U, P3

 © 2019 All Rights Reserved, Grote® Industries, Inc.

46832

G2102

54012

46873

60331

46303

HI COUNT® LED LAMPS

Part Number	Description	Connector	Voltage (nominal)	Current Draw	Diode Layout	Regulations / Standards
G2102	Red, Reflex Lens	Hard Wire	12V	P2: .12A	8	FMVSS 108 / SAE A, P2
G2103	Yellow, Reflex Lens	Hard Wire	12V	P2: .15A	10	FMVSS 108 / SAE A, P2

INCANDESCENT LAMPS

Part Number	Description	Connector	Voltage (nominal)	Current Draw	Branding	Regulations / Standards
46832	Red, Optic Lens	Male Pin	12V	P2: .66A	TurtleBack® II	FMVSS 108 / SAE P2, P3
46833	Yellow, Optic Lens	Male Pin	12V	P2: .66A	TurtleBack® II	FMVSS 108 / SAE P2, P3
46872	Red, Reflex Lens	Male Pin	12V	P2: .66A	TurtleBack® II	FMVSS 108 / SAE A, P2
46873	Yellow, Reflex Lens	Male Pin	12V	P2: .66A	TurtleBack® II	FMVSS 108 / SAE A, P2
78363	Yellow, Optic Lens, ABS	Male Pin	12V	P2: .66A	TurtleBack® II	FMVSS 108 / SAE P2, P3
60331	Clear Lens, License	Male Pin	12V	L: .66A	TurtleBack® II	FMVSS 108 / SAE L
46072	Red, Reflex Lens	Hard Wire	12V	P2: .33A	Economy	FMVSS 108 / SAE A, P2
46082	Red, Reflex Lens, Kit (Pigtail and Lamp)	Hard Wire	12V	P2: .33A	Economy	FMVSS 108 / SAE A, P2
46073	Yellow, Reflex Lens	Hard Wire	12V	P2: .33A	Economy	FMVSS 108 / SAE A, P2
46083	Yellow, Reflex Lens Kit (Pigtail and Lamp)	Hard Wire	12V	P2: .33A	Economy	FMVSS 108 / SAE A, P2
45462	Red, Optic Lens, Two Bulb	UBS .180	12V	P2: .66A	TurtleBack®	FMVSS 108 / SAE P2
45463	Yellow, Optic Lens, Two Bulb	UBS .180	12V	P2: .66A	TurtleBack®	FMVSS 108 / SAE P2
46302	Red, Reflex Lens, Two Bulb	UBS .180	12V	P2: .66A	TurtleBack®	FMVSS 108 / SAE A, P2
46303	Yellow, Reflex Lens, Two Bulb	UBS .180	12V	P2: .66A	TurtleBack®	FMVSS 108 / SAE A, P2
45442	Red, Optic Lens, No Splice	Hard Wire	12V	P2: .66A	TurtleBack®	FMVSS 108 / SAE P2
45443	Yellow, Optic Lens, No Splice	Hard Wire	12V	P2: .66A	TurtleBack®	FMVSS 108 / SAE P2
53062	Red, Optic Lens, White Base, Side Marker	Male Pin	12V	P2: .59A	Sentry	FMVSS 108 / SAE P2
53063	Yellow, Optic Lens, White Base, Side Turn/Marker	Male Pin	12V	E2: 1.34A, P2: .59A	Economy	FMVSS 108 / SAE E2, P2
53163	Yellow, Optic Lens, Black Base, Side Turn	Male Pin	12V	E2: 1.34A	Economy	FMVSS 108 / SAE E2
54012	Red, Optic Lens, Supplemental High Mount Stop	Male Pin	12V	U: 1.34A	Economy	FMVSS 108 / SAE U

© 2019 All Rights Reserved, Grote® Industries, Inc.

LED

MICRONOVA® LED LAMPS

Oval or Round. These high-end LED marker lamps are useful as P2, PC, dual intensity or indicator lamps. Most varieties use no mechanical fasteners. These lamps have a super-low profile and are nearly impossible to break. If a high-end style, design and performance lamp is appealing to you, the MicroNova® series is a perfect match.

45302

47963

45303

47982 / 47983

MICRONOVA® OVAL LED LAMPS

Part Number	Description	Connector	Voltage (nominal)	Current Draw	Function	Regulations / Standards
47982	Red, Clear Lens, with Chrome Bezel	UBS .180	12V	P2: .05A	P2 Marker	FMVSS 108 / SAE P2
47983	Yellow, Clear Lens, with Chrome Bezel	UBS .180	12V	P2: .05A	P2 Marker	FMVSS 108 / SAE P2
47953	Yellow, with Chrome Bezel	UBS .180	12V	P2: .05A	P2 Marker	FMVSS 108 / SAE P2
47962	Red, with Grommet	UBS .180	12V	P2: .05A	P2 Marker	FMVSS 108 / SAE P2
47963	Yellow, with Grommet	UBS .180	12V	P2: .05A	P2 Marker	FMVSS 108 / SAE P2
45282	Red, Surface Mount	UBS .180	12V	PC: .05A	PC Marker @ 45 Degrees	FMVSS 108 / SAE PC
45302	Red, Surface Mount	Hard Shell	12V	PC: .05A	PC Marker @ 45 Degrees	FMVSS 108 / SAE PC
45283	Yellow, Surface Mount	UBS .180	12V	PC: .05A	PC Marker @ 45 Degrees	FMVSS 108 / SAE PC
45303	Yellow, Surface Mount	Hard Shell	12V	PC: .05A	PC Marker @ 45 Degrees	FMVSS 108 / SAE PC

 © 2019 All Rights Reserved, Grote® Industries, Inc.

47973

45283

47962

47972

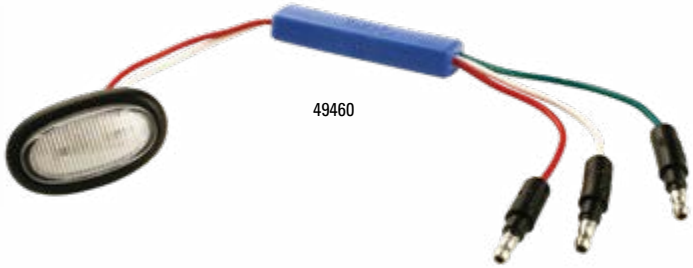
49460

49372

47953

49202

Part Number	Description	Connector	Voltage (nominal)	Current Draw	Function	Regulations / Standards
47972	Red, with Grommet	UBS .180	12V	PC: .05A	PC Marker @ 45 Degrees	FMVSS 108 / SAE PC
47973	Yellow, with Grommet	UBS .180	12V	PC: .05A	PC Marker @ 45 Degrees	FMVSS 108 / SAE PC
49372	Red, with Grommet, Dual Intensity	Slimline .180	12V	P2: .05A	Auxiliary Signal	FMVSS 108 / SAE P2
49382	Red, with Grommet, Dual Intensity	UBS .180	12V	P2: .05A	Auxiliary Signal	FMVSS 108 / SAE P2
49373	Yellow, with Grommet, Dual Intensity	Slimline .180	12V	P2: .05A	Auxiliary Signal	FMVSS 108 / SAE P2
49383	Yellow, with Grommet, Dual Intensity	UBS .180	12V	P2: .05A	Auxiliary Signal	FMVSS 108 / SAE P2
49460	Red, Green, Clear Lens, with Grommet	UBS .180	12V	.05A	Indicator	NA
49202	Red, Three Lamp Bar Kit	UBS .180	12V	P2: .16A	Narrow Rail ID Cluster	FMVSS 108 / SAE P2

© 2019 All Rights Reserved, Grote® Industries, Inc.

LED

49332

MICRONOVA® DOT LED LAMPS

49453

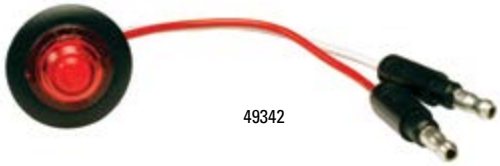

49342

49281

49413

MICRONOVA® DOT LED LAMPS

Part Number	Description	Connector	Voltage (nominal)	Current Draw	Function	Regulations / Standards
49322	Red, with Grommet	UBS .180	12V	.05A	P2 Marker	FMVSS 108 / SAE P2
49323	Yellow, with Grommet	UBS .180	12V	.05A	P2 Marker	FMVSS 108 / SAE P2
49332	Red, with Grommet	UBS .180	12V	.05A	PC Marker	FMVSS 108 / SAE PC
49333	Yellow, with Grommet	UBS .180	12V	.05A	P2/PC Marker	FMVSS 108 / SAE P2, PC
49452	Red, with Bracket	UBS .180	12V	.05A	PC Marker	FMVSS 108 / SAE PC
49453	Yellow, with Bracket	UBS .180	12V	.05A	PC Marker	FMVSS 108 / SAE PC
49412	Red, with Adaptor Bracket	UBS .180	12V	.05A	PC Marker	FMVSS 108 / SAE PC
49413	Yellow, with Adaptor Bracket	UBS .180	12V	.05A	PC Marker	FMVSS 108 / SAE PC
49341	White, with Grommet	UBS .180	12V	.05A	Position Light	ECE R7
49342	Red, with Grommet	UBS .180	12V	.05A	Position Light	ECE R7
49343	Yellow, with Grommet	UBS .180	12V	.05A	Side Marker	ECE R91
49351	White, with Grommet	UBS .180	24V	.05A	Position Light	ECE R7
49352	Red, with Grommet	UBS .180	24V	.05A	Position Light	ECE R7
49353	Yellow, with Grommet	UBS .180	24V	.05A	Side Marker	ECE R91
49262	Red, with Grommet	UBS .180	12V/24V	.03A	PC	FMVSS 108 / SAE PC
49282	Red, with Grommet	UBS .180	12V/24V	.03A	Position Light	ECE R7
49263	Yellow, with Grommet	UBS .180	12V/24V	.03A	PC	FMVSS 108 / SAE PC
49283	Yellow, with Grommet	UBS .180	12V/24V	.03A	Side Marker	ECE R91
49281	White, with Grommet	UBS .180	12V/24V	.03A	Position Light	ECE R7

 © 2019 All Rights Reserved, Grote® Industries, Inc.

60671

60721

60831

60701, 60681

60824

49362

60691

60661

60711

Part Number	Description	Connector	Voltage (nominal)	Current Draw	Function	Regulations / Standards
49362	Red, with Grommet, Dual Intensity	UBS .180	12V	High .05A, Low .02A	Auxiliary Signal	FMVSS 108 / SAE P2
49363	Yellow, with Grommet, Dual Intensity	UBS .180	12V	High .05A, Low .02A	Auxiliary Signal	FMVSS 108 / SAE P2
60824	Green, with Grommet	UBS .180	12V	.05A	Indicator	NA
60721	White, with Hooded Grommet	UBS .180	12V/24V	.03A	License	FMVSS 108 / SAE L
60861	White, with Hooded Grommet	Deutsch®	12V/24V	.03A	License	FMVSS 108 / SAE L
60661	White, with Adaptor Bracket	UBS .180	12V/24V	.03A	License	FMVSS 108 / SAE L
60651	White, Bracket Mount	UBS .180	12V/24V	.03A	License	FMVSS 108 / SAE L
60711	White, Bracket Kit (Bracket and Lamp)	UBS .180	12V/24V	.03A	License	FMVSS 108 / SAE L
60671	White, Integrated Clear Bracket	UBS .180	12V/24V	.03A	License	FMVSS 108 / SAE L
60701	White, Vertical Mount Kit, Black	UBS .180	12V/24V	.03A	License (43962)	FMVSS 108 / SAE L
60681	White, Vertical Mount Kit, Gray	UBS .180	12V/24V	.03A	License (43690)	FMVSS 108 / SAE L
60781	White, Vertical Mount Kit, Gray	UBS .180	12V/24V	.03A	License (42332)	FMVSS 108 / SAE L
60681	White, Vertical Mount Kit, Black	UBS .180	12V/24V	.03A	License (42332)	FMVSS 108 / SAE L
60691	White, Horizontal Mount Kit, Black	UBS .180	12V/24V	.03A	License (42162)	FMVSS 108 / SAE L
60831	White, with Grommet	Deutsch®	9–32V	.03A	Task Light	ECE R7

© 2019 All Rights Reserved, Grote® Industries, Inc.

01

CLEARANCE / MARKER LAMPS

FEUX DE GABARIT / POSITION

LÁMPARAS DE GÁLIBO / DEMARCADORA

 © 2019 All Rights Reserved, Grote® Industries, Inc.

MICRONOVA® DOT LED CLEARANCE/MARKER LAMP

LED

Available in PC and P2 versions with .180 bullet or Deutsch® connectors • Sleek aerodynamic styling extends less than 3/8" from mounted surface • No fasteners required

P2 RATED:

49322	Red, w/ Grommet	
49322-5	Red, w/ Grommet	RETAIL
49323	Yellow, w/ Grommet	
49323-5	Yellow, w/ Grommet	RETAIL

PC RATED:

49452	Red, w/ Bracket	PC
49453	Yellow, w/ Bracket	PC
49332	Red, w/ Grommet	PC
49333	Yellow, P2/PC w/ Grommet	PC
49412	Red, w/ Adapter Bracket	PC
49413	Yellow, w/ Adapter Bracket	PC

ECE RATED:

49341	White, w/ Grommet	ECE
49342	Red, w/ Grommet	ECE
49343	Yellow, w/ Grommet	ECE
49351	White, w/ Grommet	ECE 24 VOLT
49352	Red, w/ Grommet	ECE 24 VOLT
49353	Yellow, w/ Grommet	ECE 24 VOLT
60831	White, w/ Grommet and Deutsch® Connector	ECE 24 VOLT

MULTI VOLT:

49262	Red, w/ Grommet	PC MULTI
49282	Red, w/ Grommet	PC MULTI ECE
49263	Yellow, w/ Grommet	PC MULTI
49283	Yellow, w/ Grommet	PC MULTI ECE
49281	Clear, w/ Grommet	PC MULTI ECE

Material: Lens - Acrylic; Bracket - Polycarbonate; Grommet - PVC
Regulations / Standards: FMVSS 108, ECE / SAE P2, P3, PC
Finish: Red, Yellow, White
Volts / Amps: 12V / .05A
24V / .05A
9–32V / .03A
Brackets: 42110, 94350, 42063
VMRS Code: 034-004-253

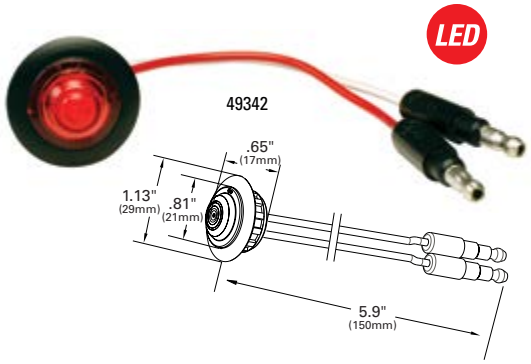

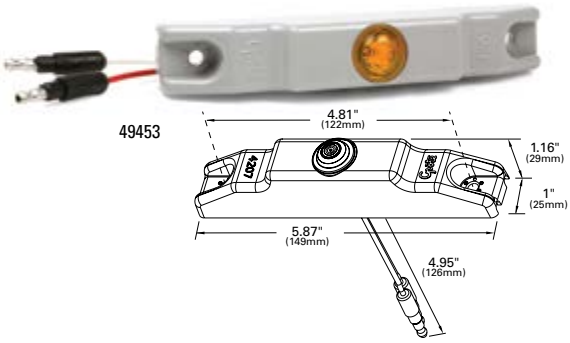

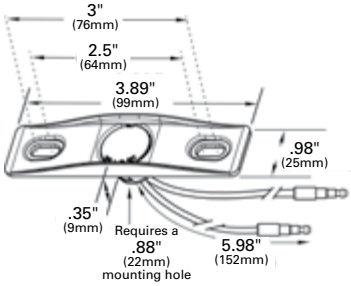

DUAL INTENSITY MICRONOVA® DOT LED CLEARANCE/MARKER LAMP

LED

Dual Intensity allows for better visibility • Hermetic lens-to-housing seal • Encapsulant potting for total circuit board protection against vibration and corrosion • Sleek aerodynamic styling, small size fits in narrow applications

49362	Red, w/ Grommet, Standard
49363	Yellow, w/ Grommet, Standard

Material: Lens - Acrylic; Grommet - PVC
Regulations / Standards: FMVSS 108 / SAE P2
Finish: Red / Black ; Yellow / Black
Volts / Amps: High - 12V / .05A; Low - 12V / .02A;
VMRS Code: 034-004-253

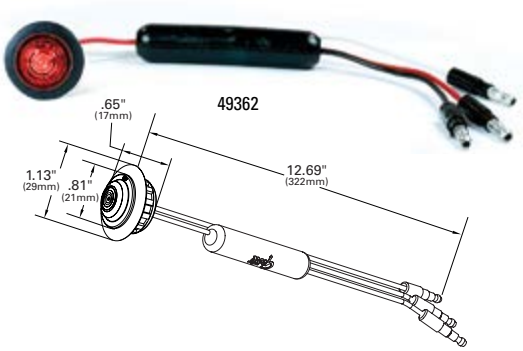

© 2019 All Rights Reserved, Grote® Industries, Inc.

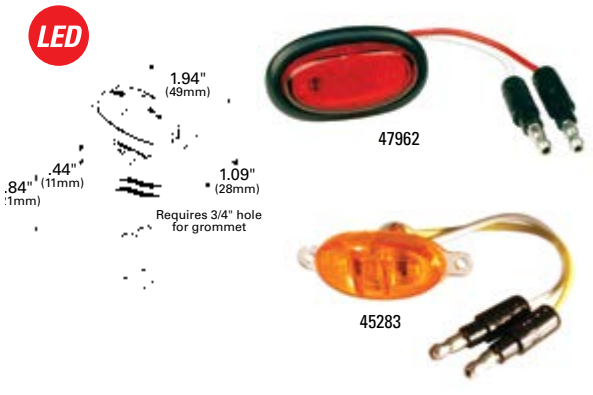

MICRONOVA® LED CLEARANCE/MARKER LAMP

Low profile makes lamp less susceptible to damage • Small size fits narrow applications • All PC versions meet requirements when mounted at 45° angle

47982	Red, Clear Lens w/ Chrome Bezel	
47952	Red, w/ Chrome Bezel	
47952-5	Red, w/ Chrome Bezel	RETAIL
47953	Yellow, w/ Chrome Bezel	
47953-5	Yellow, w/ Chrome Bezel	RETAIL
47983	Yellow, Clear Lens w/ Chrome Bezel	
47962	Red, w/ Grommet	
47963	Yellow, w/ Grommet	

PC RATED:

45282	Red, Surface Mount	PC
45283	Yellow, Surface Mount	PC
47972	Red, w/ Grommet	PC
47973	Yellow, w/ Grommet	PC
45302	Red, w/ Hardshell	PC
45303	Yellow, w/ Hardshell	PC

Material: Lens - Acrylic; Bracket - Polycarbonate; Grommet - PVC
Regulations / Standards: FMVSS 108 / SAE P2, PC
Finish: Red / Yellow / Chrome
Volts / Amps: 12V / .05A
Pigtail: 68580
Accessory: Bezel Chrome 93803; Mounting Gasket: 94220
Bracket: 42110
VMRS Code: 034-004-253

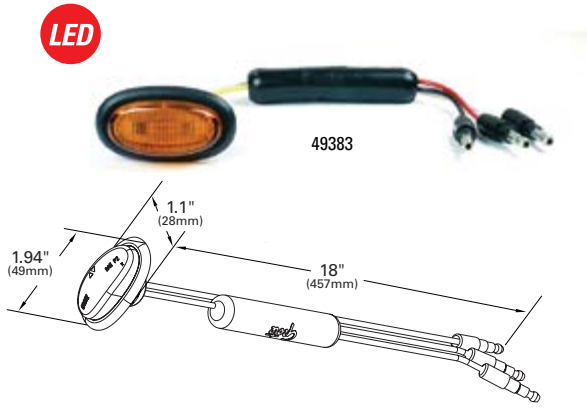

DUAL INTENSITY MICRONOVA® LED CLEARANCE/MARKER LAMP

Dual Intensity enhances signaling visibility and safety • Small size fits in narrow applications • No exposed fasteners

49372	Red, w/ Grommet, Slim-Line .180
49373	Yellow, w/ Grommet, Slim-Line .180
49382	Red, w/ Grommet, Standard .180
49383	Yellow, w/ Grommet, Standard .180

Material: Lens - Acrylic; Grommet - PVC
Regulations / Standards: FMVSS 108 / SAE P2
Finish: Red, Yellow
Volts / Amps: 12V / .05A
Brackets: 42110
VMRS Code: 034-004-253

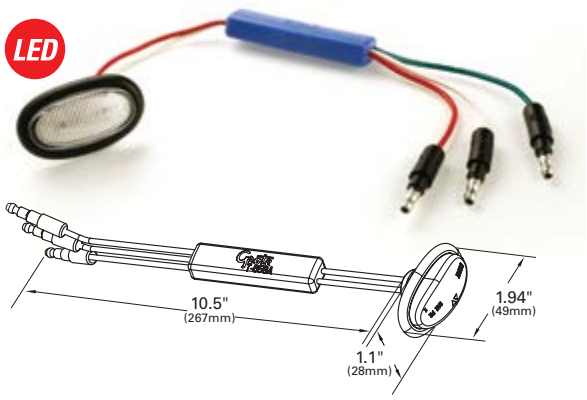

MICRONOVA® RED/GREEN INDICATOR LAMP

Suitable for bright sunlight applications • Dual color circuiting molded into pigtail with bullet connectors • Clear lens with Red / Green LEDs • No exposed fasteners

49460	Red/Green, Clear Lens w/ Grommet

Material: Lens - Clear; Grommet - Polycarbonate
Ingress Protection: IP69K
Volts / Amps: 12V
VMRS Code: 034-004-253

 © 2019 All Rights Reserved, Grote® Industries, Inc.

MICRONOVA® DOT LED INDICATOR LAMP

Durable one-piece LED lamp • No mounting hardwire required • Hardwired with .180 standard UBS plug connectors for maximum performance

60824 Green, w/ Grommet

Material: Polycarbonate
Finish: Green
Voltage Amp: 12V / .05A
Brackets: 42110, 94350
VMRS Code: 034-004-253

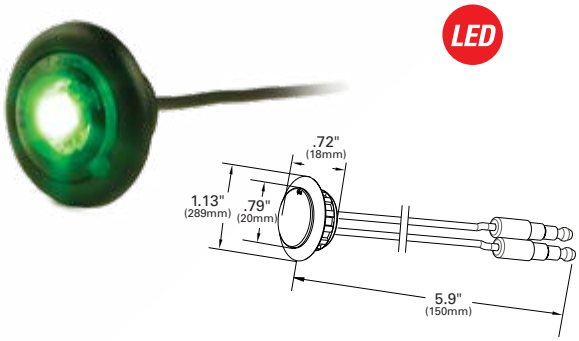

SUPERNOVA® 2" LED CLEARANCE/ MARKER LAMP

Uses same UBS double-seal pigtail as incandescent for quick Plug-and-Go® retrofit • Tin-plated, solid-brass terminals are sealed to housing to resist corrosion and eliminate failure causing leak paths

47112 Red
47113 Yellow
47332 Red 24 VOLT
47333 Yellow 24 VOLT
46132 Red PC
46133 Yellow PC

ABS LAMP:

78433 Yellow

Material: Polycarbonate
Regulations / Standards: FMVSS 108 / SAE P2, PC, P3
Finish: Red / Yellow
Volts / Amps: 12V / .06A
Red - 24V / .03A
Yellow - 24V / .04A
Bracket: 43690, 43150, 43152, 43153, 43532, 43760, 42180
Grommet: 92120, 92150, 93760
Pigtail: 66851, 67001, 66850, 66801, 67050, 66800, 66840
VMRS Code: 034-004-253

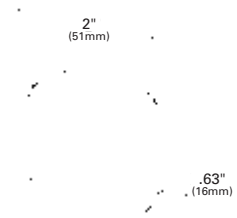

47112

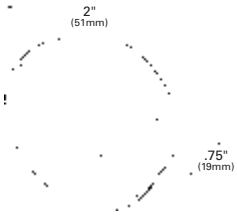

46133

HI COUNT® 2" 9-DIODE LED CLEARANCE/MARKER LAMP

Uses the same UBS double-seal pigtail as our incandescent version for a quick Plug-and-Go® retrofit • Twist-on mounting for easy installation

G3002 Red
G3002-5 Red RETAIL
G3003 Yellow
G3003-5 Yellow RETAIL

Material: Polycarbonate
Regulations / Standards: FMVSS 108 / SAE P2
Finish: Red / Yellow
Volts / Amps: Red - 12V / .04A,
Yellow - 12V / .07A
Bracket: 43690, 43150, 43152, 43153, 43532, 43760, 42180
Grommet: 92120, 92150, 93760
Pigtail: 66851, 67001, 66850, 66801, 67050, 66800, 66840
VMRS Code: 034-004-253

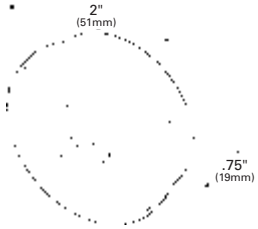

G3003

© 2019 All Rights Reserved, Grote® Industries, Inc.

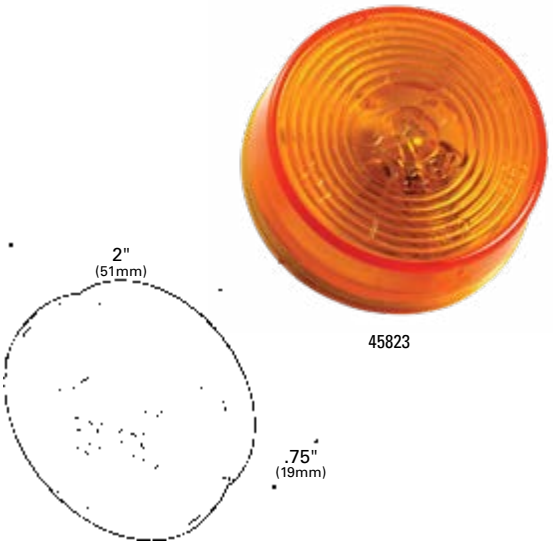

2" CLEARANCE/MARKER LAMP

Twist-on mounting for easy installation • Fits all popular mountings and grommets • All versions meet PC requirements when mounted at a 45° angle, recommended bracket 43690

45822	Red	PC
45822-5	Red	PC RETAIL
45823	Yellow	PC
45823-5	Yellow	PC RETAIL
KITS:		
45062	Red (45822 + 92120 + 67050)	PC
45063	Yellow (45823 + 92120 + 67050)	PC
ABS LAMP:		
78333	Yellow	PC

Material: Polycarbonate
Regulations / Standards: FMVSS 108 / SAE P2, P3, PC, PC2
Finish: Red / Yellow
Volts / Amps: Bulb 2 CP: 12V / .33A
Bracket: 43690, 43150, 43152, 43153, 43532, 43760, 42180
Grommet: 92120, 92150, 93760
Pigtail: 66851, 67001, 66850, 66801, 67050, 66800, 66840
VMRS Code: 034-004-021

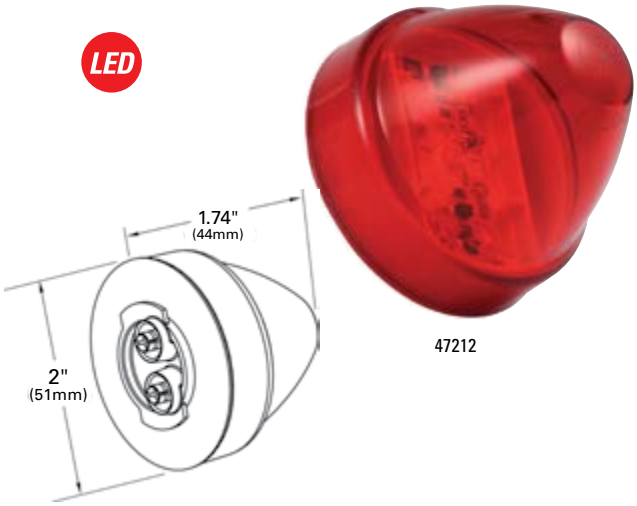

SUPERNOVA® 2" BEEHIVE LED CLEARANCE/ MARKER LAMP

Tin-plated, solid-brass terminals are sealed to housing to resist corrosion and eliminate failure causing leak paths • Uses same UBS double-seal pigtail as incandescent for a quick Plug-and-Go® retrofit

47212	Red
47213	Yellow

Material: Polycarbonate
Regulations / Standards: FMVSS 108 / SAE P2
Finish: Red / Yellow
Volts / Amps: 12V / .06A
Bracket: 43690, 43150, 43152, 43153, 43532, 43760, 42180
Grommet: 92120, 92150, 93760
Pigtail: 66851, 67001, 66850, 66801, 67050, 66800, 66840
VMRS Code: 034-004-253

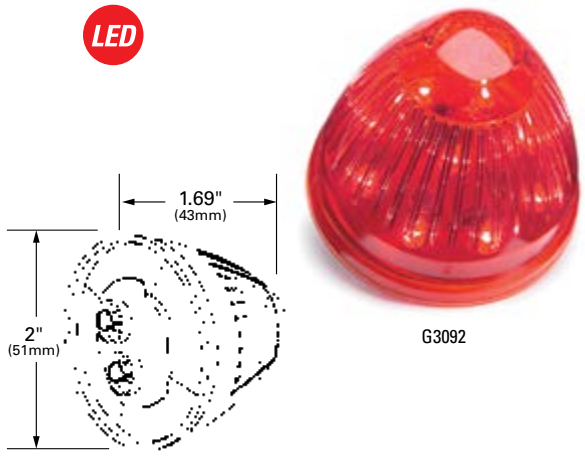

HI COUNT® 2" 9-DIODE BEEHIVE LED CLEARANCE/MARKER LAMP

Uses the same UBS double-seal pigtail as the incandescent version for a quick Plug-and-Go® retrofit • Twist-on mounting for easy installation • Fits all popular mountings and grommets

G3092	Red	PC
G3093	Yellow	PC

Material: Polycarbonate
Regulations / Standards: FMVSS 108 / SAE P2, PC
Finish: Red / Yellow
Volts / Amps: Red - 12V / .04A, Yellow - 12V / .07A
Bracket: 43690, 43150, 43152, 43153, 43532, 43760, 42180
Grommet: 92120, 92150, 93760
Pigtail: 66851, 67001, 66850, 66801, 67050, 66800, 66840
VMRS Code: 034-004-253

 © 2019 All Rights Reserved, Grote® Industries, Inc.

2" BEEHIVE CLEARANCE/MARKER LAMP

Fits popular grommet and bracket mountings • Twist-on mounting for easy installation • Meets PC function only when mounted at a 45° angle, recommended bracket 43690

47102	Red	PC
47103	Yellow	PC

Material: Polycarbonate
Regulations / Standards: FMVSS 108 / SAE P2, PC
Finish: Red / Yellow
Bulb: 2 CP
Volts / Amps: 12V / .33A
Bracket: 43690, 43150, 43152, 43153, 43532, 43760, 42180
Grommet: 92120, 92150, 93760
Pigtail: 66851, 67001, 66850, 66801, 67050, 66800, 66840
VMRS Code: 034-004-021

47103

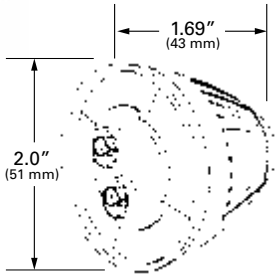

SUPERNOVA® 2½" LED CLEARANCE/MARKER LAMP

LED

Uses same UBS double-seal pigtail as incandescent version for a quick Plug-and-Go® retrofit • Tin-plated, solid-brass terminals are sealed to housing, to resist corrosion and eliminate failure causing leak paths

47122	Red	
47123	Yellow	
47202	Red w/ Black, Theft-Resistant Flange	
47322	Red	24 VOLT
47323	Yellow	24 VOLT
46142	Red	PC
46143	Yellow	PC

KITS:

47472	Red (47122 + 91400 + 67001)
47473	Yellow (47123 + 91400 + 67001)

ABS LAMP:

78423	Yellow

Material: Polycarbonate
Regulations / Standards: FMVSS 108 / SAE P2, PC, P3
Finish: Red / Yellow
Volts / Amps: 12V / .06A
24V / .03A
Bracket: 43690, 43160, 43162, 43163, 43512, 43522, 93750, 42180, 42170
Grommet: 91400, 91410, 92070, 91890, 91880, 92920
Pigtail: 66851, 67001, 66850, 66801, 67050, 66800, 66840
VMRS Code: 034-004-253

47123

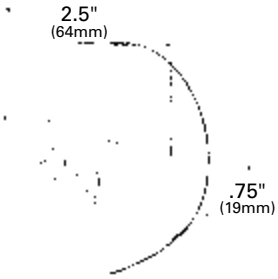

46142

© 2019 All Rights Reserved, Grote® Industries, Inc.

LED

SUPERNOVA® 2½" PC RATED, LED CLEARANCE/MARKER LAMP

Uses same UBS double-seal pigtail as incandescent for a quick Plug-and-Go® retrofit • Tin-plated, solid-brass terminals are sealed to housing, to resist corrosion and eliminate failure-causing leak paths • Available with lamp sealed to flange, for direct mounting in the side of a trailer, eliminating a leak-path into the trailer

47232	Red	PC
47233	Yellow	PC

SEALED FLANGE APPLICATIONS:

47372	Red w/ Gray Theft-Resistant Flange	PC
47373	Yellow w/ Gray Theft-Resistant Flange	PC

Material: Polycarbonate
Regulations / Standards: FMVSS 108 / SAE P2, P3, PC
Finish: Red / Yellow
Volts / Amps: 12V / .06A
Bracket: 43690, 43160, 43162, 43163, 43512, 43522, 93750, 42180, 42170
Grommet: 91400, 91410, 92070, 91890, 91880, 92920
Pigtail: 66851, 67001, 66850, 66801, 67050, 66800, 66840
VMRS Code: 034-004-253

LED

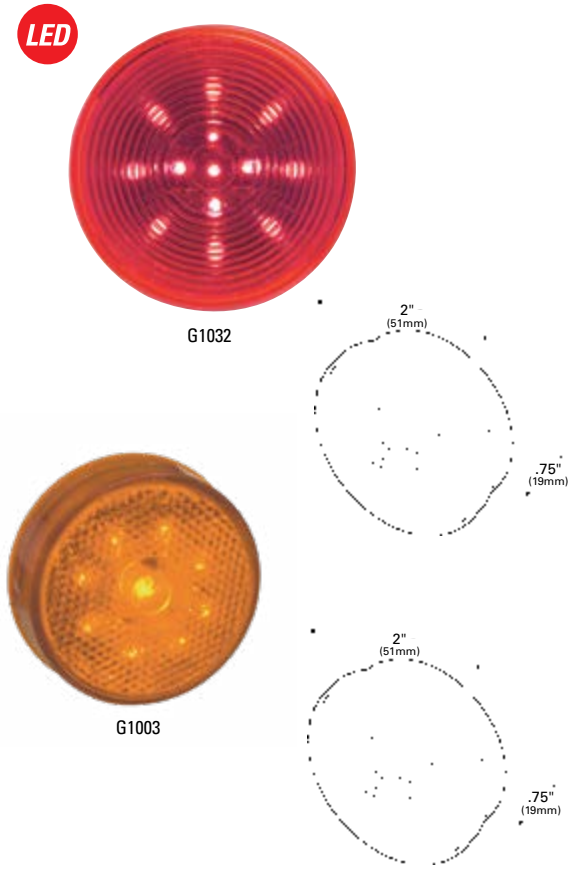

HI COUNT® 2½" 9-DIODE LED CLEARANCE/MARKER LAMP

Uses the same UBS double-seal pigtail as the incandescent version for a quick Plug-and-Go® retrofit • Twist-on mounting for easy installation • Fits all popular mountings and grommets

OPTIC LENS:

G1032	Red	
G1032-5	Red	RETAIL
G1033	Yellow	
G1033-5	Yellow	RETAIL
G1042	Red, Clear Lens	
G1043	Yellow, Clear Lens	

REFLEX LENS:

G1002	Red
G1003	Yellow

Material: Polycarbonate
Regulations / Standards: FMVSS 108 / Optic - SAE P2, Reflex - SAE A, P2
Finish: Red / Yellow
Volts / Amps: Red - 12V / .04A,
Yellow - 12V / .07A
Bracket: 43690, 43160, 43162, 43163, 43512, 43522, 93750, 42180, 42170
Grommet: 91400, 91410, 92070, 91890, 91880, 92920
Pigtail: 66851, 67001, 66850, 66801, 67050, 66800, 66840
VMRS Code: 034-004-253

 © 2019 All Rights Reserved, Grote® Industries, Inc.

HI COUNT® 2½" 9-DIODE LED CLEARANCE/MARKER LAMP

Uses the same UBS double-seal pigtail as our incandescent version for a quick Plug-and-Go® retrofit • Twist-on mounting for easy installation • Fits all popular mountings and grommets

G1092 Red
G1093 Yellow

Material: Polycarbonate
Regulations / Standards: FMVSS 108 / SAE P2
Finish: Red / Yellow
Volts / Amps: 12V / .09A
Bracket: 43690, 43160, 43162, 43163, 43512, 43522, 93750, 42180, 42170
Grommet: 91400, 91410, 92070, 91890, 91880, 92920
Pigtail: 66851, 67001, 66850, 66801, 67050, 66800, 66840
VMRS Code: 034-004-253

G1093

LED

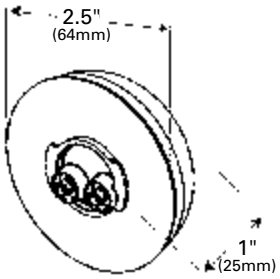

2½" CLEARANCE/MARKER LAMP

Hermetic lens-to-housing seal • Twist-on mounting for easy installation • Fits all popular mountings and grommets • Optic lens versions meet PC function only when mounted at a 45° angle, recommended bracket: 43690; grommets: 91890 or 92920

OPTIC LENS:

45812 Red PC
45812-5 Red PC RETAIL
45813 Yellow PC
45813-5 Yellow PC RETAIL

OPTIC LENS KITS:

45042 Red (45812 + 91400 + 67050) PC
45043 Yellow (45813 + 91400 + 67050) PC

REFLEX LENS:

45832 Red
45833 Yellow

BUILT-IN REFLECTOR KITS:

45072 Red (45832 + 91400 + 67050)
45073 Yellow (45833 + 91400 + 67050)

ABS LAMP:

78343 Yellow, Optic Lens PC

Material: Lens - Acrylic; Housing - Polycarbonate
Regulations / Standards: FMVSS 108 / Optic - SAE P2, P3, PC, PC2; Reflex - SAE A, P2, P3
Finish: Red / Yellow
Volts / Amps: Bulb: 2 CP: 12V / .33A
Bulb: 3 CP; Volts / Amps: 24V / .17A
Bracket: 43690, 43160, 43162, 43163, 43512, 43522, 93750, 42180, 42170
Grommet: 91400, 91410, 92070, 91890, 91880, 92920
Pigtail: 66851, 67001, 66850, 66801, 67050, 66800, 66840
VMRS Code: 034-004-021

45812

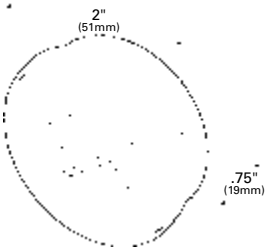

45833

© 2019 All Rights Reserved, Grote® Industries, Inc.

45413

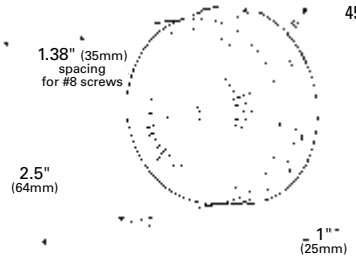

2½" SURFACE MOUNT SINGLE-BULB CLEARANCE/MARKER LAMP

Snap-on lens for easy bulb replacement • OE replacement on Mack® MR models • Meets PC function only when mounted at a 45° angle

45412	Red	PC
45412-5	Red	PC RETAIL
45413	Yellow	PC
45413-5	Yellow	PC RETAIL

Material: Polypropylene / Acrylic
Regulations / Standards: FMVSS 108 / SAE P2, PC
Finish: Red / Yellow
Bulb: #193, 2 CP
Volts / Amps: 12V / .33A
Lens: Red 90162, Yellow 90163
VMRS Code: 034-004-021

LED

47223

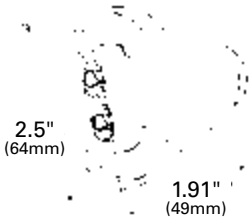

SUPERNOVA® 2½" BEEHIVE LED CLEARANCE/MARKER LAMP

Tin-plated, solid-brass terminals are sealed to housing to resist corrosion and eliminate failure-causing leak paths • Uses same UBS double-seal pigtail as incandescent for a quick Plug-and-Go® retrofit

47222	Red
47223	Yellow

Material: Polycarbonate
Regulations / Standards: FMVSS 108 / SAE P2
Finish: Red / Yellow
Volts / Amps: 12V / .06A
Bracket: 43690, 43160, 43162, 43163, 43512, 43522, 93750, 42180, 42170
Grommet: 91400, 91410, 92070, 91890, 91880, 92920
Pigtail: 66851, 67001, 66850, 66801, 67050, 66800, 66840
VMRS Code: 034-004-253

LED

G1083

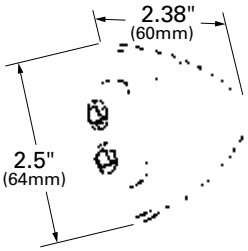

HI COUNT® 2½" 9-DIODE BEEHIVE LED CLEARANCE/MARKER LAMP

Twist-on mounting for easy installation • Fits all popular mountings and grommets

G1082	Red
G1083	Yellow

Material: Polycarbonate
Regulations / Standards: FMVSS 108 / SAE P2
Finish: Red / Yellow
Volts / Amps: Red - 12V / .04A,
Yellow - 12V / .07A
Bracket: 43690, 43160, 43162, 43163, 43512, 43522, 93750, 42180, 42170
Grommet: 91400, 91410, 92070, 91890, 91880, 92920
Pigtail: 66851, 67001, 66850, 66801, 67050, 66800, 66840
VMRS Code: 034-004-253

 © 2019 All Rights Reserved, Grote® Industries, Inc.

2½" BEEHIVE CLEARANCE/MARKER LAMP

Twist-on mounting for easy installation • Fits all popular mountings and grommets • All PC versions meet requirements when mounted at 45° angle

45322 Red PC
45323 Yellow PC

Material: Polycarbonate
Regulations / Standards: FMVSS 108 / SAE P2, PC
Finish: Red / Yellow
Bulb: 2 CP
Volts / Amps: 12V / .33A
Bracket: 43690, 43160, 43162, 43163, 43512, 43522, 93750, 42180, 42170
Grommet: 91400, 91410, 92070, 91890, 91880, 92920
Pigtail: 66851, 67001, 66850, 66801, 67050, 66800, 66840
VMRS Code: 034-004-021

45323

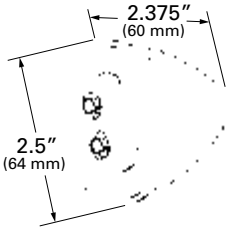

BEEHIVE CLEARANCE/MARKER LAMP WITH FIXED-ANGLE MOUNTING BRACKET

Wide light-diffusion optic design • Fade-resistant, snap-on acrylic lens • Bracket is permanently attached • Meets PC function only when mounted at a 45° angle

45022 Red PC
45023 Yellow PC

Material: ABS / Steel / Acrylic
Regulations / Standards: FMVSS 108 / SAE P2, PC
Finish: Red / Yellow
Bulb: #67, 4 CP
Volts / Amps: 12V / .59A
Lens: Yellow 90303
VMRS Code: 034-004-021

45023

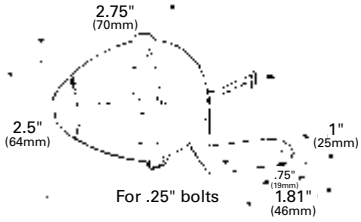

2½" OVAL LED CLEARANCE/MARKER LAMP

Surface mount design for easy installation • Self-grounding eyelet grounds lamp when attached to metal plate (47012 and 47013)

45002-5 Red, w/ Chrome Bezel RETAIL
45003-5 Yellow, w/ Chrome Bezel RETAIL

SELF GROUNDING:

47012 Red
47013 Yellow

Material: Polycarbonate
Regulations / Standards: FMVSS 108 / SAE P2, P3
Finish: Red / Yellow
Volts / Amps: 12V / .05A
VMRS Code: 034-004-253

LED

47012

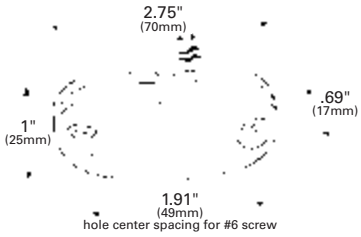

© 2019 All Rights Reserved, Grote® Industries, Inc.

LED

SUPERNOVA® LED CLEARANCE/MARKER LAMP

Tin-plated, solid-brass terminals are sealed to housing, to resist corrosion and eliminate failure-causing leak paths • Uses the same UBS double-seal pigtail as incandescent for a quick Plug-and-Go® retrofit

47082	Red
47083	Yellow
47084	Green

Material: Polycarbonate
Regulations / Standards: FMVSS 108 / SAE P2 (N/A Green)
Finish: Red / Yellow / Green
Volts / Amps: 12V / .06A
Bracket: 43970, 43980, 94233, 43380
Grommet: 91380
Pigtail: 66851, 67001, 66850, 66801, 67050, 66800, 66840
VMRS Code: 034-004-253

LED

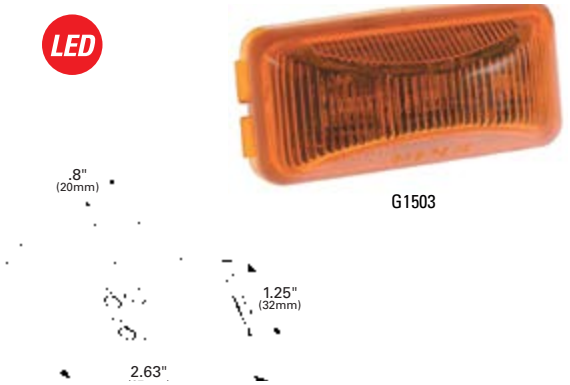

HI COUNT® 3-DIODE LED CLEARANCE/MARKER LAMP

Uses the same UBS double-seal pigtail as the incandescent version for a quick Plug-and-Go® retrofit • Fits popular mountings and grommets

G1502	Red
G1503	Yellow

Material: Polycarbonate
Regulations / Standards: FMVSS 108 / SAE P2
Finish: Red / Yellow
Volts / Amps: 12V / .06A
Bracket: 43970, 43980, 94233, 43380
Grommet: 91380
Pigtail: 66851, 67001, 66850, 66801, 67050, 66800, 66840
VMRS Code: 034-004-253

CLEARANCE/MARKER LAMP

Uses double-seal UBS pigtail • Meets PC function only when mounted at a 45° angle, recommend bracket 43380

45162	Red	PC 24 VOLT
46412	Red	PC
46412-5	Red, Pair Pack	PC RETAIL
46413	Yellow	PC
46413-5	Yellow, Pair Pack	PC RETAIL
KITS:		
46422-5	Red (43980 + 67050)	PC
46423-5	Yellow (43980 + 67050)	PC

Material: Polycarbonate
Regulations / Standards: FMVSS 108 / SAE P2, PC
Finish: Red / Yellow
Volts / Amps: Bulb: 2 CP: 12V / .33A; Bulb: 3 CP: 24V / .17A
Bracket: 43970, 43980, 94233, 43380
Grommet: 91380;
Pigtail: 66851, 67001, 66850, 66801, 67050, 66800, 66840
VMRS Code: 034-004-021

 © 2019 All Rights Reserved, Grote® Industries, Inc.

SUPERNOVA® LED CLEARANCE/MARKER LAMP

Uses same UBS pigtail as incandescent for a quick Plug-and-Go® retrofit
- Meets PC function only when mounted at a 45° angle

P2 RATED::

47092 Red
47093 Yellow

KITS:

65202 Red (47092 + 43850)
65203 Yellow (47093 + 43850)

PC RATED:

47492 Red PC
47493 Yellow PC

Material: Polycarbonate
Regulations / Standards: FMVSS 108 / SAE P2, PC
Finish: Red / Yellow
Volts / Amps: P2 Rated - 12V / .06A; PC Rated - 12V / .12A
Accessory: Lamp Guard: 43120
Bracket: 43780, 43783, 43850
Pigtail: 66982, 66980, 66981
VMRS Code: 034-004-253

LED

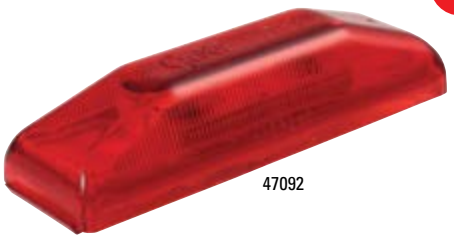

47092

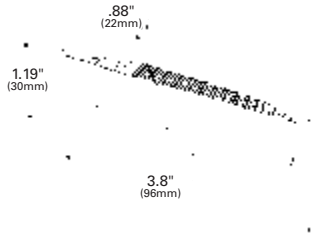

HI COUNT® 3-DIODE LED CLEARANCE/MARKER LAMP

Hermetic lens-to-housing seal • Uses the same UBS double-seal pigtail as the incandescent version for a quick Plug-and-Go® retrofit • Fits all popular mountings and grommets

G1902 Red
G1902-5 Red RETAIL
G1903 Yellow
G1903-5 Yellow RETAIL

Material: Polycarbonate
Regulations / Standards: FMVSS 108 / SAE P2
Finish: Red / Yellow
Volts / Amps: 12V / .06A
Accessory: Lamp Guard: 43120; Bracket: 43780, 43783, 43850
Pigtail: 66982, 66980, 66981
VMRS Code: 034-004-253

G1903

LED

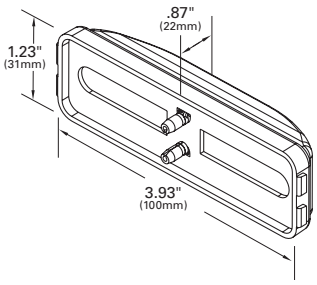

© 2019 All Rights Reserved, Grote® Industries, Inc.

46743

46740

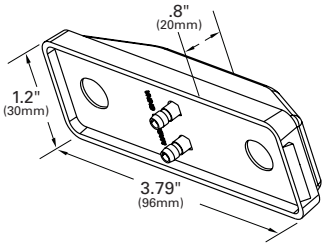

CLEARANCE/MARKER LAMP

Narrow mounting applications • Hermetic lens-to-housing seal
• Meets PC function only when mounted at a 45° angle

46742	Red	PC
46743	Yellow	PC
KITS:		
45092	Red (46742 + 43850)	PC
45093	Yellow (46743 + 43850)	PC
ABS LAMP:		
78393	Yellow	PC
SPLIT LENS COLOR		
46740	Red & Yellow	

Material: Polycarbonate
Regulations / Standards: FMVSS 108 / SAE P2, P3, PC, PC2, (46740) - SAE P2
Finish: Red / Yellow
Volts / Amps: Bulb (2) 2 CP: 12V / .66A
Bulb (2) 3 CP: 24V / .34A
Accessory: Lamp Guard: 43120
Bracket: 43780, 43783, 43850
Pigtail: 66980, 66982, 66981
VMRS Code: 034-004-021

LED

47502

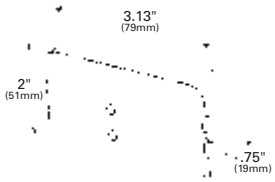

SUPERNOVA® LED CLEARANCE/MARKER LAMP WITH BUILT-IN REFLECTOR

Encapsulant potting for total circuit board protection • Tin-plated, solid-brass terminals are sealed to housing, to resist corrosion and eliminate failure-causing leak paths

47502	Red
47503	Yellow

Material: Polycarbonate
Regulations / Standards: FMVSS 108 / SAE A, P2
Finish: Red / Yellow
Volts / Amps: 12V / .06A
Grommet: 93400, 93402
Pigtail: 66851, 67001, 66850, 66801, 67050, 66800, 66840
VMRS Code: 034-004-253

45233

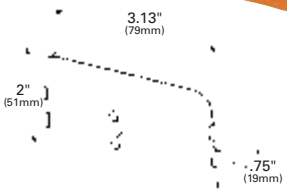

CLEARANCE/MARKER LAMP WITH BUILT-IN REFLECTOR

Fits popular grommets, pigtails and harnesses

45232	Red
45233	Yellow

Material: Polycarbonate
Regulations / Standards: FMVSS 108 / SAE A, P2
Finish: Red / Yellow
Volts / Amps: Bulb: 2 CP; 12V / .33A
Grommet: 93400, 93402
Pigtail: 66851, 67001, 66850, 66801, 67050, 66800, 66840
VMRS Code: 034-004-021

 © 2019 All Rights Reserved, Grote® Industries, Inc.

SUPERNOVA® 3" THIN-LINE LED CLEARANCE/ MARKER LAMP

3" mounting center • Field-replaceable lens • Anti-torque design protects against over tightening and lens cracking • Wire exit holes at ends allow for flow-through harnessing • All PC versions meet requirements when mounted at a 45° angle

47242 Red
47243 Yellow
47362 Red 24 VOLT

KITS:

65512 Red (47242 + 66930)
65513 Yellow (47243 + 66930)

PC RATED:

47462 Red PC
47463 Yellow PC

ABS LAMP:

78453 Yellow

Material: Polycarbonate
Regulations / Standards: FMVSS 108 / SAE P2, PC
Finish: Red / Yellow
Volts / Amps: 12V / .06A (47242, 47243, 78453), 12V / .12A (47462, 47463)
Red - 24V / .03A; Yellow - 24V / .04A
Pigtail: 66931, 66930, 66932
VMRS Code: 034-004-253

LED

47243

47462

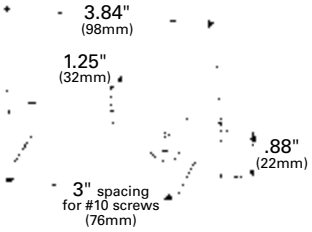

SUPERNOVA® 3" THIN-LINE DUAL INTENSITY LED CLEARANCE/MARKER LAMP

3" mounting center • Multi-function lamp enhances signaling visibility and safety • Compact size for narrow mounting locations • Lamp functions as a marker, clearance, identification and supplemental high-mount stop or turn lamp

49252 Red
49253 Yellow

Material: Polycarbonate
Regulations / Standards: FMVSS 108 / SAE P2, PC
Finish: Red / Yellow
Volts / Amps: 14V / .02A, .06A
Pigtail: 66870
VMRS Code: 034-004-253

LED

49252

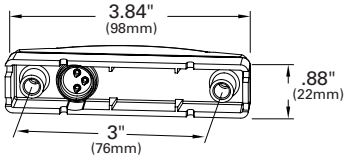

© 2019 All Rights Reserved, Grote® Industries, Inc.

LED

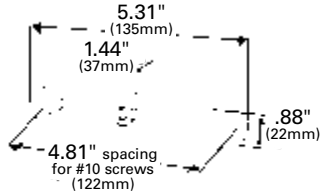

SUPERNOVA® THIN-LINE LED CLEARANCE/ MARKER LAMP

Sealed marker lamp • Encapsulant potting for total circuit board protection • Thin-Line design fits narrow rails and channels • Uses UBS double-seal pigtail for maximum protection against corrosion

46933 Yellow Lens, Yellow Body

Material: Polycarbonate
Regulations / Standards: FMVSS 108 / SAE P2
Finish: Yellow
Volts / Amps: 12V / .07A
Bracket: 43074
Pigtail: 66931, 66930, 66932
VMRS Code: 034-004-253

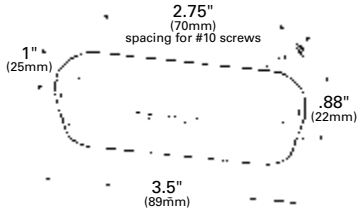

THIN-LINE SINGLE-BULB CLEARANCE/ MARKER LAMP

Narrow rail and channel mounting • Snap-on lens for easy bulb replacement • Attached pigtail

45252 Red
45252-5 Red RETAIL
45253 Yellow
45253-5 Yellow RETAIL

Material: Lens - Acrylic; Housing - Polycarbonate
Regulations / Standards: FMVSS 108 / SAE P2
Finish: Red / Yellow
Bulb: #193, 2 CP
Volts / Amps: 12V / .33A
Lens: Red 90152, Yellow 90153
VMRS Code: 034-004-021

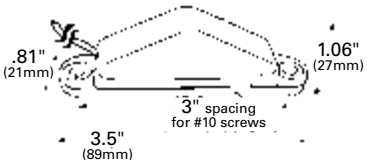

CLEARANCE/MARKER LAMP WITH PEAK LENS

Shock-resistant bulb mount • Snap-on lens for easy bulb replacement
All PC versions meet requirements when mounted at a 45° angle

BLUNT CUT:

45512 Red PC
45513 Yellow PC

Material: Polycarbonate
Regulations / Standards: FMVSS 108 / SAE P2, PC
Finish: Red / Yellow
Bulb: #194, 2 CP
Volts / Amps: 12V / .27A
Lens: Red 93252
VMRS Code: 034-004-021

 © 2019 All Rights Reserved, Grote® Industries, Inc.

ECONOMY CLEARANCE/MARKER LAMP

Snap-on lens for easy bulb replacement • Brass, ground eyelet • Compact design

46882 Red
46882-5 Red RETAIL
46883 Yellow
46883-5 Yellow RETAIL

Material: Lens - Polycarbonate; Housing - Polypropylene
Regulations / Standards: FMVSS 108 / SAE P2
Finish: Red / Yellow
Volts / Amps: Bulb #194, 2 CP: 12V / .27A
Lens: Red 92432, Yellow 92433
VMRS Code: 034-004-021

46882

RECTANGULAR SINGLE-BULB CLEARANCE/ MARKER LAMP WITH BUILT-IN REFLECTOR

Corrosion-resistant body • Flange mounting • Boat, snowmobile, trailer, and RV applications

46392 Red
46393 Yellow
46393-5 Yellow RETAIL

Material: Lens - Acrylic; Housing - Polypropylene
Regulations / Standards: FMVSS 108 / SAE A, P2, P3
Finish: Red / Yellow
Volts / Amps: 12V / .27A
Lens: Red 91112, Yellow 91113
VMRS Code: 034-004-021

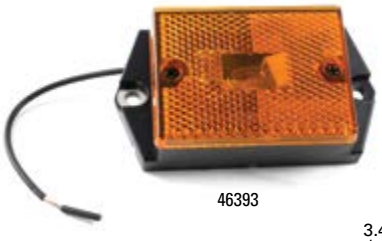
46393

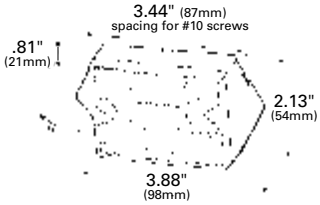

RECTANGULAR SUBMERSIBLE CLEARANCE/ MARKER LAMP WITH BUILT-IN REFLECTOR

Used with a large variety of boat, snowmobile and utility trailer lighting kits

46982-5 Red, Clearance/Marker RETAIL
46983-5 Yellow, Clearance/Marker RETAIL

Material: Lens - Acrylic; Housing - ABS
Regulations / Standards: FMVSS 108 / SAE P2, A
Finish: Red / Yellow
Volts / Amps: 12V / .27A
Lens: Red: 91112, Yellow 91113
VMRS Code: 034-004-021

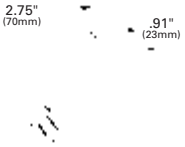

RECTANGULAR CLEARANCE/MARKER LAMP

Chrome-plated, polycarbonate housing • 2" mounting centers
• 1 1/8" socket hole required

47052 Red
47053 Yellow

Material: Lens - Acrylic; Housing - Polycarbonate
Regulations / Standards: FMVSS 108 / SAE P2
Finish: Chrome / Red / Yellow
Volts / Amps: Bulb #1895, 2 CP: 12V / .27A
VMRS Code: 034-004-021

47052

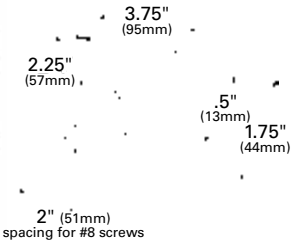

© 2019 All Rights Reserved, Grote® Industries, Inc.

SINGLE-BULB OVAL CLEARANCE/MARKER LAMP

Snap-on lens • Corrosion-resistant contact and ground • Reflex version is a combined side marker, clearance lamp, and reflector

OPTIC LENS:

46703	Yellow	

BUILT-IN REFLECTOR:

46712	Red	
46712-5	Red	RETAIL
46713	Yellow	
46713-5	Yellow	RETAIL

Material: Lens - Acrylic; Housing - Polypropylene
Regulations / Standards: FMVSS 108 / Optic - SAE P2; Reflex - SAE A, P2
Finish: Red / Yellow
Bulb: #193, 2 CP
Volts / Amps: 12V / .33A
Bracket: 43144, 43673
Lens: Optic - Red 90122, Yellow 90123; Reflex - Red 90202, Yellow 90203
VMRS Code: 034-004-021

TWO-BULB OVAL PIGTAIL-TYPE CLEARANCE/MARKER LAMP

Standard snap-on lens for easy bulb replacement • Two stainless steel grounds • Exclusive internal armor for additional bulb protection • Corrosion-resistant contacts • Reflex version is a combined side marker, clearance lamp, and reflector • Optic lens version meets PC function only when mounted at a 45° angle

OPTIC LENS:

45262	Red	PC
45263	Yellow	PC

BUILT-IN CLASS "A" REFLECTOR:

45932	Red
45933	Yellow

Material: Lens - Acrylic; Housing - Polypropylene
Regulations / Standards: FMVSS 108 / Optic - SAE P2, PC; Reflex - SAE A, P2
Finish: Red / Yellow
Bulb: (2) #1893, 2 CP
Volts / Amps: 12V / .66A
Bracket: 43144, 43673
Pigtail: 67120
Lens: Optic - Red 91572, Yellow 91573; Reflex - Red 90202, Yellow 90203
VMRS Code: 034-004-021

 © 2019 All Rights Reserved, Grote® Industries, Inc.

TWO-BULB NO-SPLICE CLEARANCE/MARKER LAMP

No-splice wiring system • Internal armor for additional protection • Standard snap-on lens for easy bulb replacement • Meets PC function only when mounted at a 45° angle

45432	Red	PC
45433	Yellow	PC

Material: Lens - Acrylic; Housing - Polypropylene
Regulations / Standards: FMVSS 108 / SAEP2, P3, PC
Finish: Red / Yellow
Volts / Amps: Bulb (2) #1893, 2 CP: 12V / .66A
Bracket: 43144, 43673
Lens: Red 91572, Yellow 91573
VMRS Code: 034-004-021

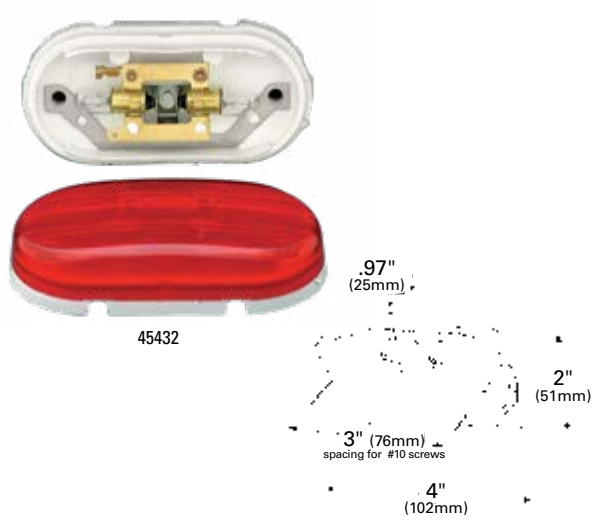

HI COUNT® SQUARE-CORNER 13-DIODE LED CLEARANCE/MARKER LAMP

Molded snap-ring • Potted for total circuit board protection • Field-replaceable lens

G4602	Red	
G4602-5	Red	RETAIL
G4603	Yellow	
G4603-5	Yellow	RETAIL

Material: Lens - Acrylic; Housing - Polycarbonate
Regulations / Standards: FMVSS 108 / SAE P2
Finish: Red / Yellow
Volts / Amps: 12V / .15A
Bracket: 43144, 43673
Lens: Red 91962, Yellow 91963, Clear 91961
VMRS Code: 034-004-253

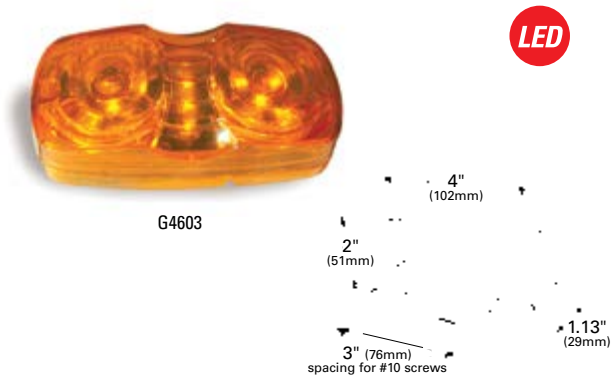

TWO-BULB SQUARE-CORNER CLEARANCE/MARKER LAMP

Corrosion-resistant contacts • Snap-on lens for easy bulb replacement • Attached blunt cut pigtail • Meets PC function only when mounted at a 45° angle

DURAMOLD®

46792	Red	PC
46792-5	Red	PC RETAIL
46793	Yellow	PC
46793-5	Yellow	PC RETAIL

DIE CAST

46782	Red	PC
46783	Yellow	PC

Materials: Duramold: Lens - Polycarbonate; Housing - Polypropylene
Die-cast: Lens - Acrylic; Housing - Steel
Regulations / Standards: FMVSS 108 / SAE P2, P3, PC
Finish: Red / Yellow
Volts / Amps: Bulb (2) #1893, 2 CP: 12V / .66A
Bracket: 43144, 43673
Pigtail: 67120
Lens: Red 91962, Yellow 91963, Auxiliary - Clear 91961, Green 91964
VMRS Code: 034-004-021

© 2019 All Rights Reserved, Grote® Industries, Inc.

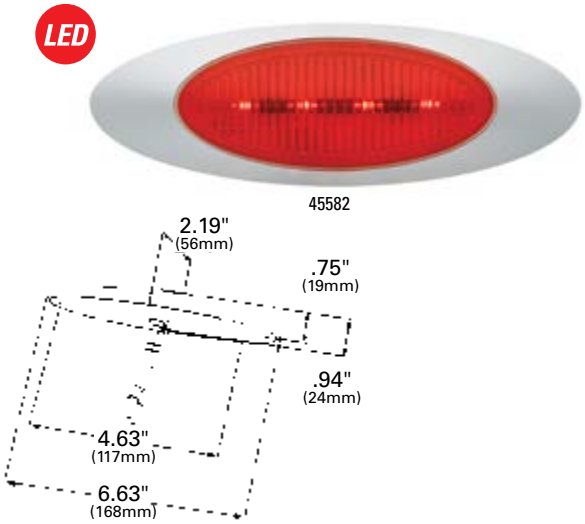

M1 SERIES LED CLEARANCE/MARKER LAMP

Sleek, aerodynamic styling • Corrosion-resistant, chrome-plated bezels • Molded bullet kits come with two replacement mating connectors

LAMP KITS WITH BEZEL:

45582	Red, .180 Molded Bullet
45583	Yellow, .180 Molded Bullet
47772	Red, Clear Lens, .180 Molded Bullet
47773	Yellow, Clear Lens, .180 Molded Bullet
45603	Yellow, Metri-pack® Plug

LAMP KITS WITHOUT BEZEL:

45623	Yellow, .180 Molded Bullet
45643	Yellow, Metri-pack® Plug

Material: Lens - Polycarbonate; Housing - Polycarbonate; Bezel - ABS
Regulations / Standards: FMVSS 108 / SAE P2
Finish: Chrome / Red / Yellow
Volts / Amps: 12V / .12A
Accessory: Bezel Chrome 93453
Pigtail: 66200
VMRS Code: 034-004-253

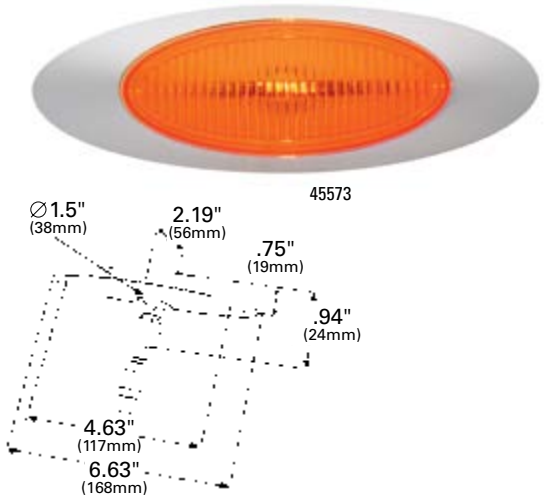

M1 SERIES CLEARANCE/MARKER LAMP

Sleek, aerodynamic styling • Molded bullet versions are bulb replaceable • Corrosion-resistant, chrome-plated bezels • Metri-pack® versions have a hermetic lens-to-housing seal

LAMP KITS WITH BEZEL:

45573	Yellow, .180 Molded Bullet
45593	Yellow, Metri-pack® Plug

LAMP KITS WITHOUT BEZEL:

45633	Yellow, Metri-pack® Plug

Material: Lens and Housing - Polycarbonate; Bezel - Chrome-plated ABS
Regulations / Standards: FMVSS 108 / SAE P2
Finish: Chrome / Red / Yellow
Volts / Amps: Bulb: #193, 2 CP: 12V / .33A; Bulb: #464, 3 CP: 24V / .17A
Accessory: Bezel Chrome 93453
Pigtail: 66200
VMRS Code: 034-004-253

M3 SERIES LED CLEARANCE/MARKER LAMP

Sleek, aerodynamic styling • Corrosion-resistant, chrome-plated bezels • Kits contain two replacement mating connectors

LAMP KITS WITH BEZEL:

45773	Yellow, .180 Molded Bullet

LAMP KITS WITHOUT BEZEL:

45793	Yellow, .180 Molded Bullet

Material: Lens and Housing - Polycarbonate; Bezel - Chrome-plated ABS
Regulations / Standards: FMVSS 108 / SAE P2
Finish: Yellow
Volts / Amps: 12V / .06A
Pigtail: 66200
VMRS Code: 034-004-253

 © 2019 All Rights Reserved, Grote® Industries, Inc.

M3 SERIES CLEARANCE/MARKER LAMP

Sleek, aerodynamic styling • Field replaceable, bulb design • Corrosion-resistant, chrome-plated bezels • No exposed fasteners

45763 Yellow, .180 Molded Bullet

Material: Lens and Housing - Polycarbonate; Bezel - Chrome-plated ABS
Regulations / Standards: FMVSS 108 / SAE P2
Finish: Yellow
Bulb: #193, 2 CP
Volts / Amps: 12V / .33A
Pigtail: 66200
VMRS Code: 034-004-253

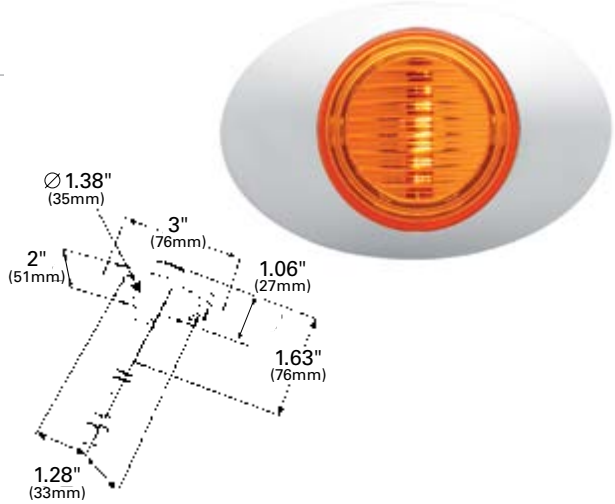

M5 SERIES LED CLEARANCE/MARKER LAMP

Sleek, aerodynamic styling • Corrosion-resistant chrome-plated bezels • Kits contain two replacement mating connectors • Small size fits into narrow applications

LAMP KITS WITH BEZEL:

47913 Yellow, .180 Molded Bullet
47922 Red, Clear Lens, .180 Molded Bullet
47923 Yellow, Clear Lens, .180 Molded Bullet

Material: Lens and Housing - Polycarbonate; Bezel - Chrome-plated ABS
Regulations / Standards: FMVSS 108 / SAE P2
Finish: Chrome / Clear / Red / Yellow
Pigtail: 66200
VMRS Code: 034-004-253

47922

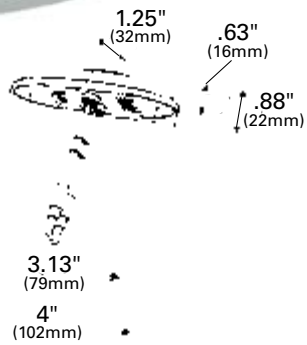

SUPERNOVA® LOW-PROFILE LED CLEARANCE/ MARKER LAMP

Sealed hardwire terminations with .180 molded, UBS Slim-Line bullets • Field replaceable lens • Requires 1 1/4" hole for mounting • Popular marker lamp on Peterbilt® trucks • Built-in reflector

WITHOUT BEZEL:

47262 Red, w/ .180 Molded Bullets
47263 Yellow, w/ .180 Molded Bullets

WITH BEZEL:

47252 Red, w/ .180 Molded Bullets
47253 Yellow, w/ .180 Molded Bullets

Material: Lens - Acrylic; Housing - Polypropylene; Bezel - Stainless Steel
Regulations / Standards: FMVSS 108 / SAE A, P2
Finish: Stainless Steel / Red / Yellow
Volts / Amps: 12V / .06A
Lens: Red 90072, Yellow 90073
VMRS Code: 034-004-253

47252

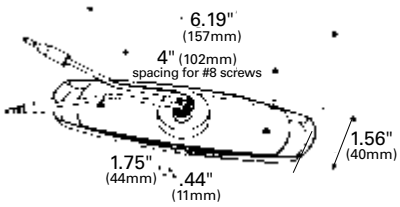

© 2019 All Rights Reserved, Grote® Industries, Inc.

45713

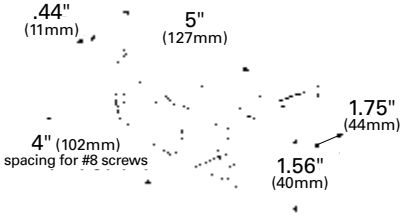

LOW-PROFILE CLEARANCE/MARKER LAMP

Field-replaceable lens • Requires 1 1/4" socket hole for mounting • Twist-in bulb socket for easy bulb replacement • Built-in reflector

WITHOUT BEZEL:

45712 Red
45713 Yellow

WITH BEZEL:

45662 Red
45663 Yellow

Material: Lens - Acrylic; Housing - Polypropylene; Bezel - Stainless Steel
Regulations / Standards: FMVSS 108 / SAE A, P2
Finish: Stainless Steel / Red / Yellow
Bulb: #194, 2 CP
Volts / Amps: 12V / .27A
Pigtail: 68380
Lens: Red 90072, Yellow 90073
VMRS Code: 034-004-021

LED

47733

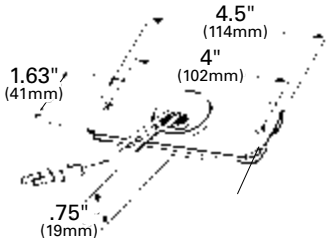

SEALED RECTANGULAR LED CLEARANCE/ MARKER LAMP

Fits standard mounting holes, no bracket required • Uses same .180 molded bullet connections as incandescent versions for a quick, easy retrofit • Replaces Truck-Lite® 18050R (red) or 18050Y (yellow)

47732 Red, w/ .180 Molded Bullets BI-VOLT
47733 Yellow, w/ .180 Molded Bullets BI-VOLT

Material: Acrylic
Regulations / Standards: FMVSS 108 / SAE A, P2
Finish: Red / Yellow
Volts / Amps: 12V / .06A, 24V / .06A
VMRS Code: 034-004-253

 © 2019 All Rights Reserved, Grote® Industries, Inc.

SUPERNOVA® SEALED TURTLEBACK® II LED CLEARANCE/MARKER LAMP

Tin-plated, solid-brass terminals are sealed to housing to resist corrosion and eliminate failure causing leak paths • Meets PC function only when mounted at a 45° angle • Not designed for vertical mount

BUILT-IN REFLECTOR:

47072 Red, Male Pin
47073 Yellow, Male Pin

PC RATED OPTIC LENS:

47162 Red, Male Pin PC
47163 Yellow, Male Pin PC
49392 Red, Hardwire PC
49393 Yellow, Hardwire PC

ABS LAMP:

78403 Yellow, Reflex Lens, Male Pin

Material: Reflex - Lens: Acrylic; Housing: Polycarbonate
Optic - Lens: Polycarbonate
Duel - Housing: Polycarbonate
Regulations / Standards: FMVSS 108 / Optic - SAE P2, PC; Reflex - SAE A, P2
Finish: Red / Yellow
Volts / Amps: P2 - 12V / .06A
PC Red - 12V / .04A, Yellow - 12V / .06A
Bracket: 43050
Pigtail: 66911, 66910, 67070, 67071
VMRS Code: 034-004-253

LED

47073

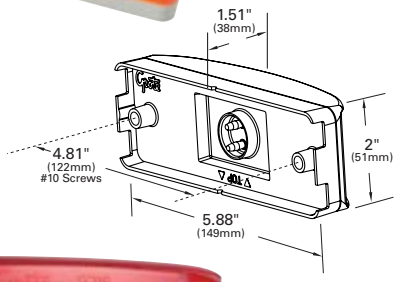

47162

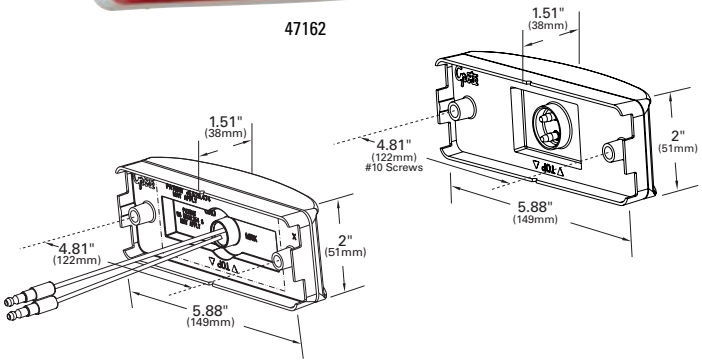

HI COUNT® TURTLEBACK® II LED CLEARANCE/MARKER LAMP

Hermetic lens-to-housing seal • Shock-absorbing, heat-resistant lens and lamp base • Red lamp has 8 diodes, yellow lamp has 10 diodes
• Built in reflector

G2102 Red
G2103 Yellow

Material: Lens: Acrylic; Housing: Polycarbonate
Regulations / Standards: FMVSS 108 / SAE A, P2
Finish: Red / Yellow
Volts / Amps: Red - 12V / .12A
Yellow - 12V / .15A
Bracket: 43050
VMRS Code: 034-004-253

LED

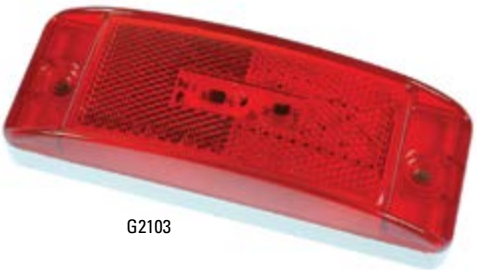

G2103

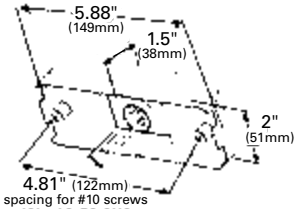

© 2019 All Rights Reserved, Grote® Industries, Inc.

LED

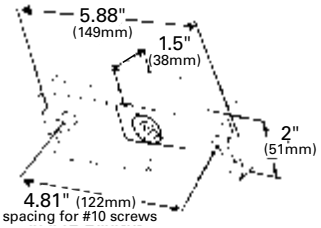

SUPERNOVA® SEALED TURTLEBACK® II LED DUAL INTENSITY CLEARANCE/MARKER LAMP

Tin-plated, solid-brass terminals are sealed to housing to resist corrosion and eliminate failure-causing leak paths • Meets PC function when mounted at a 45° angle • Not designed for vertical mount

54003 Yellow, Male Pin

Material: Polycarbonate
Regulations / Standards: FMVSS 108 / SAE P2, PC
Color: Yellow
Voltage Amp: 12V / .12A
Bracket: 43050
Pigtail: 66815, 66816, 66841, 66845, 67002, 67005
VMRS Code: 034-004-253

46832

46873

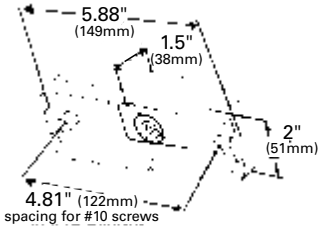

SEALED TURTLEBACK® II CLEARANCE/MARKER LAMP

Shock-absorbing, heat-resistant lens and lamp base • Waterproof male pin connections accept UBS pigtail • Turtleback® lens design for maximum durability • Optic lens version meets PC function only when mounted at a 45° angle

OPTIC LENS:

46832 Red, Male Pin PC
46833 Yellow, Male Pin PC

REFLEX LENS:

46872 Red, Male Pin
46873 Yellow, Male Pin

ABS LAMP:

78363 Yellow, Optic Lens, Male Pin PC

Material: Reflex: Lens - Acrylic; Housing - Polycarbonate
Optic: Lens and Housing - Polycarbonate
Regulations / Standards: FMVSS 108 / Optic - SAE P2, P3, PC;
Reflex - SAE A, P2
Finish: Red / Yellow
Bulb: (2) 2 CP
Volts / Amps: 12V / .66A
Bracket: 43050
Pigtail: 66910, 66911, 67070, 67071
VMRS Code: 034-004-021

 © 2019 All Rights Reserved, Grote® Industries, Inc.

ECONOMY SEALED CLEARANCE/MARKER LAMP

Self grounding eyelet grounds lamp when attached to a metal plate
• Retrofits to competitor lamps easily with hot wire termination; Truck-Lite® 21201R (red) or 21201Y (yellow) • Reflex built-in

46072 Red
46073 Yellow

KITS:

46082 Red (46072 + 66360)
46083 Yellow (46073 + 66360)

Material: Acrylic
Regulations / Standards: FMVSS 108 / SAE A, P2
Finish: Red / Yellow
Bulb: 2 CP
Volts / Amps: 12V / .33A
Pigtail: 66360
VMRS Code: 034-004-021

46072

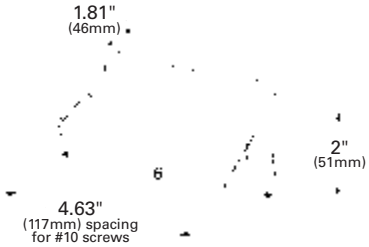

TWO-BULB TURTLEBACK® CLEARANCE/ MARKER LAMP

Two stainless steel grounds

OPTIC LENS:

45462 Red
45463 Yellow

BUILT-IN REFLECTOR:

46302 Red
46303 Yellow

Material: Optic: Lens - Polycarbonate; Housing - Polypropylene
Reflex: Lens - Acrylic; Housing - Polypropylene
Regulations / Standards: FMVSS 108 / Optic - SAE P2; Reflex - SAE A, P2
Finish: Red / Yellow
Bulb: (2) #1893, 2 CP
Volts / Amps: 12V / .66A
Pigtail: 67120
Lens: Optic - Red 90172, Yellow 90173; Reflex - Red 91042, Yellow 91043
VMRS Code: 034-004-021

45462

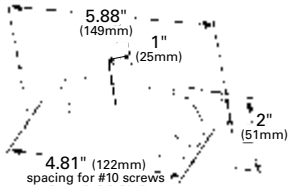

46303

© 2019 All Rights Reserved, Grote® Industries, Inc.

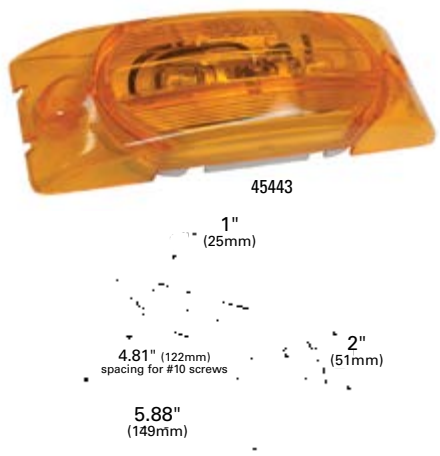

TWO-BULB TURTLEBACK® NO-SPLICE CLEARANCE/MARKER LAMP

No-splice wiring system • Turtleback® lens design for maximum durability • Corrosion-resistant contacts

45442 Red
45443 Yellow

Material: Lens - Polycarbonate; Housing - Polypropylene
Regulations / Standards: FMVSS 108 / SAE P2
Finish: Red / Yellow
Bulb: (2) #1893, 2 CP
Volts / Amps: 12V / .66A
Lens: Red 90172, Yellow 90173
VMRS Code: 034-004-021

LED

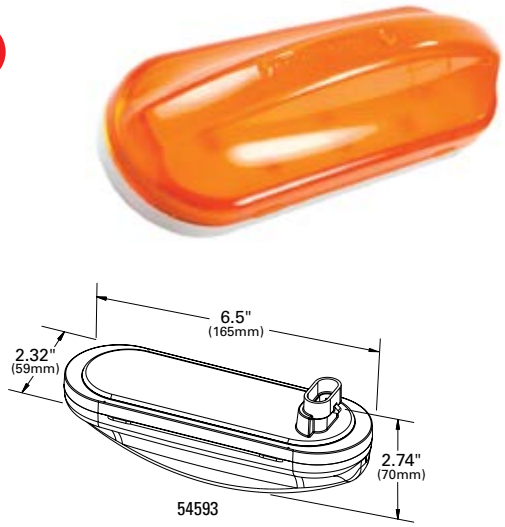

RAZORBACK MID-POSITION FLASHING LED MARKER LAMP

Patent-pending electronic design meets all FMVSS 108 marker requirements and also flashes in concert with the turn signal circuitry to act as a mid-position flasher • 50-State-Legal flashing mid-position marker • Easily visible from the cab during operation • Fits current mounting flanges and grommets

54593 Yellow, Hardshell
54663 Yellow, Male Pin

Material: Polycarbonate
Finish: Yellow
Regulations / Standards: FMVSS 108 / SAE P2
Volts / Amps: 13.5V / .18A
Brackets: 43220, 43222, 43223, 43732, 43362, 43952, 43172, 43100, 42152, 42153
Grommet: 92420, 92720
Pigtails: 66861
VMRS Code: 034-003-097

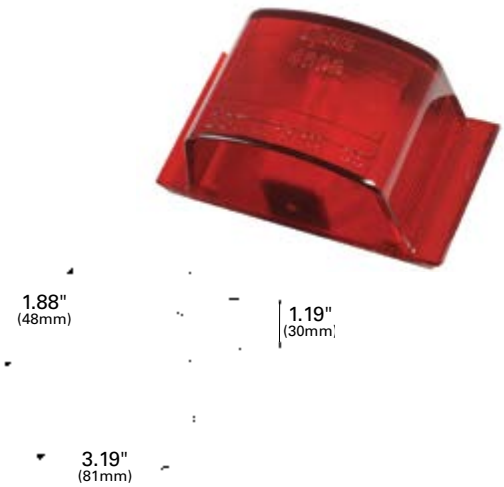

SMALL SQUARE PC-RATED CLEARANCE/MARKER LAMP

Direct replacement for Truck-Lite® 12200R • Includes gasket • Sonic sealed lens

46092 Red PC

Material: Polycarbonate
Regulations / Standards: FMVSS 108 / SAE P2, PC
Finish: Red
Bulb: 2 CP
Volts / Amps: 12V / .33A
VMRS Code: 034-004-021

 © 2019 All Rights Reserved, Grote® Industries, Inc.

DIE-CAST ALUMINUM CLEARANCE/MARKER LAMP

Mounts without disassembly • Holes interchange with competitive lamps for easy retrofits • Lens replaces comparable competitor models • Meets PC function only when mounted at a 45° angle

FLAT BACK, NO SOCKET HOLE REQUIRED:

46282 Red PC
46283 Yellow PC

Material: Lens - Acrylic; Housing - Aluminum
Regulations / Standards: FMVSS 108 / SAE P2, PC
Finish: Red / Yellow
Bulb: #193, 2 CP
Volts / Amps: 12V / .33A
Lens: Red 90922, Yellow 90923
VMRS Code: 034-004-021

46282

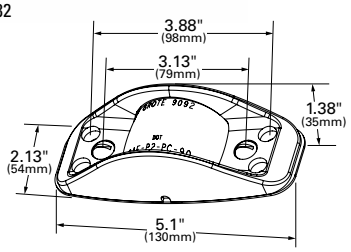

NARROW-RAIL CLEARANCE/MARKER LAMP

Steel housing for additional lamp protection • Two- or four-hole mounting for easy retrofits • Flat back; no need for lamp socket hole • Meets PC function only when mounted at a 45° angle

45172 Red PC
45173 Yellow PC

Material: Lens - Acrylic; Housing - Steel
Regulations / Standards: FMVSS 108 / SAE P2, P3, PC
Finish: Red / Yellow
Bulb: #193, 2 CP
Volts / Amps: 12V / .33A
Lens: Red 90052, Yellow 90053, Auxiliary: Clear 90051
VMRS Code: 034-004-021

45173

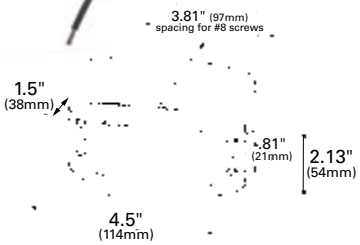

ARMORED CLEARANCE/MARKER LAMP

Steel housing for additional lamp protection • Two- or four-hole mounting for easy retrofits • Rear socket hole required • Meets PC function only when mounted at a 45° angle

45012 Red PC
45013 Yellow PC

Material: Lens - Acrylic; Housing - Steel
Regulations / Standards: FMVSS 108 / SAE P2, P3, PC
Finish: Red / Yellow
Bulb: #67, 4 CP
Volts / Amps: 12V / .59A
Pigtail: 68080
Lens: Red 90052, Yellow 90053; Auxiliary: Clear 90051
VMRS Code: 034-004-021

45012

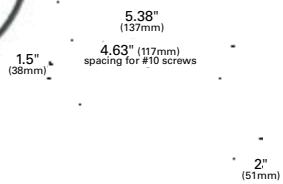

© 2019 All Rights Reserved, Grote® Industries, Inc.

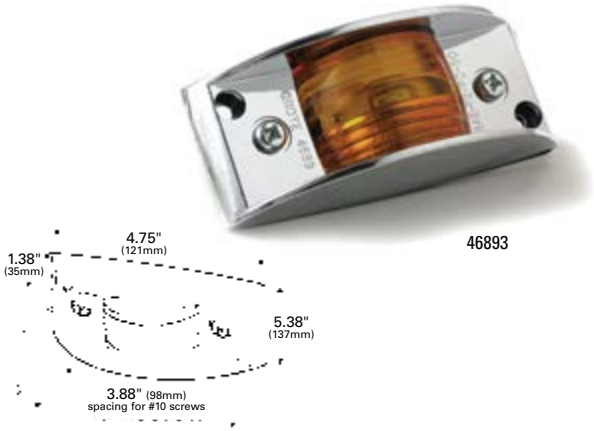

CHROME-ARMORED CLEARANCE/MARKER LAMP

Direct interchange for competitive models • Flat back; no bulb socket hole required • Meets PC function only when mounted at a 45° angle

46892	Red	PC
46892-5	Red	PC RETAIL
46893	Yellow	PC
46893-5	Yellow	PC RETAIL

Material: Lens - Acrylic; Housing - Chrome-plated ABS
Regulations / Standards: FMVSS 108 / SAE P2, PC
Finish: Red / Yellow
Bulb: #194, 2 CP
Volts / Amps: 12V / .27A
Lens: Red 90922, Yellow 90923
VMRS Code: 034-004-021

LED

SUPERNOVA® LOW-PROFILE LED BAR LAMP

Twist-in, locking feature • Sealed UBS harness • Uses 2 1/2" round LED replacement lamps

49162 Red

Material: Lens - Polycarbonate; Housing - Steel
Regulations / Standards: FMVSS 108 / SAE P2
Finish: Red
Volts / Amps: 12V / .18A
Accessory: Lamp: Red 47122; Harness: 67740
VMRS Code: 034-004-149

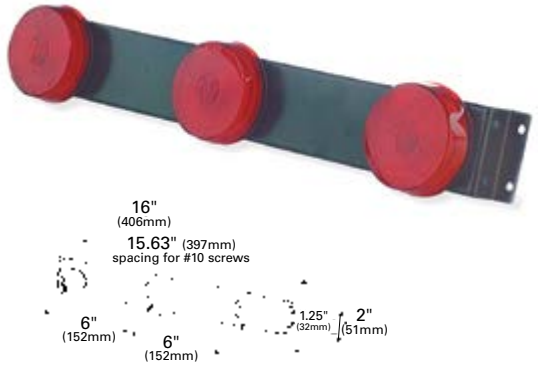

LOW-PROFILE BAR LAMP

Uses 2 1/2" round, replaceable lamps • Twist-in, locking feature • Sealed UBS harness

49142 Red

Material: Lens - Polycarbonate; Housing - Steel
Regulations / Standards: FMVSS 108 / SAE P2
Finish: Red
Bulb: (3) 2 CP
Volts / Amps: 12V / .99A
Accessory: Harness: 67740, Lamp: Red 45812
VMRS Code: 034-004-149

LED

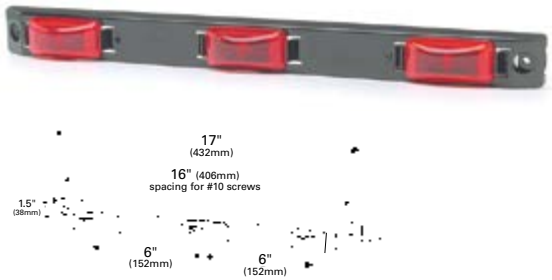

SUPERNOVA® LED BAR LAMP

Snap-on replacement lamps • Sealed flow-through UBS harness • Rugged reinforced polycarbonate bar • Easy to install

49182 Red

Material: Polycarbonate
Regulations / Standards: FMVSS 108 / SAE P2
Finish: Red
Volts / Amps: 12V / .18A
Accessory: Lamp: Red 47082; Harness: 69710
VMRS Code: 034-004-149

 © 2019 All Rights Reserved, Grote® Industries, Inc.

POLYCARBONATE BASE BAR LAMP

Three replaceable snap-on lamps • Sealed flow-through harness • Rugged reinforced polycarbonate bar • Easy to install

49172 Red

Material: Polycarbonate
Regulations / Standards: FMVSS 108 / SAE P2
Finish: Red
Bulb: (3) 2 CP
Volts / Amps: 12V / .99A
Accessory: Lamp: Red 46412, Yellow 46413; Harness: 69710
VMRS Code: 034-004-149

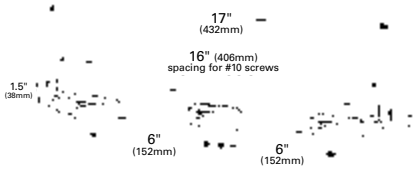

ALUMINUM BASE BAR LAMP

Thin-line design fits narrow rails and channels • Three two-bulb replaceable snap-on lamps • Easy installation • UBS wire harness included

49132 Red

Material: Lens - Polycarbonate; Housing - Aluminum
Regulations / Standards: FMVSS 108 / SAE P2
Finish: Red
Bulb: (6) 2 CP
Volts / Amps: 12V / 1.98A
Accessory: Lamp: Red 46742
VMRS Code: 034-004-149

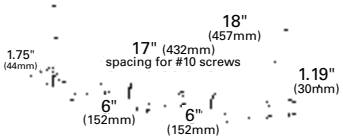

MICRONOVA® LED BAR LAMP

LED

Low-profile design fits narrow rail applications • Easy to install • Rugged reinforced polycarbonate bar

49202 Red

Material: Polycarbonate
Regulations / Standards: FMVSS 108 / SAE P2
Finish: Red
Volts / Amps: 12V / .16A
Accessory: Lamps: Red 47962
VMRS Code: 034-004-149

SUPERNOVA® THIN-LINE LED BAR LAMP

LED

Thin-Line design fits narrow rails and channels • Easy installation • Sealed UBS harness included • Replaceable external guard made of formed aluminum

49122 Red

Material: Lens - Polycarbonate; Housing - Aluminum
Regulations / Standards: FMVSS 108 / SAE P2
Finish: Red
Volts / Amps: 12V / .18A
Branch Guard: 43074
VMRS Code: 034-004-149

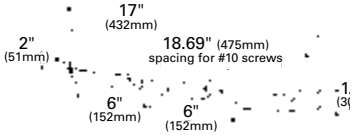

© 2019 All Rights Reserved, Grote® Industries, Inc.

15" SLIM LED BAR LAMP

Impact-resistant housing is sealed for moisture protection

49192 Red
49223 Yellow
49242-5 Red, 13.5" RETAIL

Material: Polycarbonate
Regulations / Standards: FMVSS 108 / SAE P2, P3
Finish: Red / Yellow
Volts / Amps: 12V / .25A
VMRS Code: 034-004-149

2½" OVAL LED BAR LAMP

Impact resistant housing with sonic sealed, shock and vibration-resistant lamps • Uses three dual-diode LED lamps

49212-5 Red RETAIL

Material: Lens and Housing - Polycarbonate; Bar - ABS
Regulations / Standards: FMVSS 108 / SAE P2
Finish: Red
Volts / Amps: 12V / .15A
Accessory: Lamp: Red 47012
VMRS Code: 034-004-149

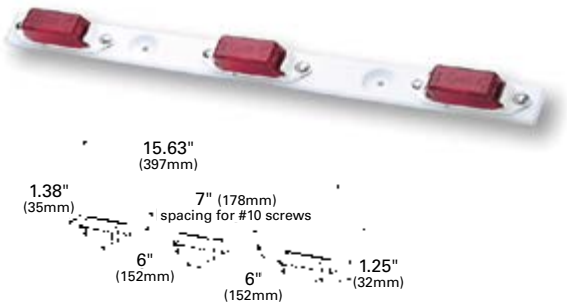

ECONOMY BAR LAMP

Three bulb-replaceable 46882 lamps • Formed steel bar with white enamel

49112 Red
49112-5 Red RETAIL

Material: Lens - Acrylic; Housing - Polycarbonate; Bar - Formed Steel
Regulations / Standards: FMVSS 108 / SAE P2
Finish: Red
Bulb: (3) #194, 2 CP
Volts / Amps: 12V / .81A
Lens: Red 92432
VMRS Code: 034-004-149

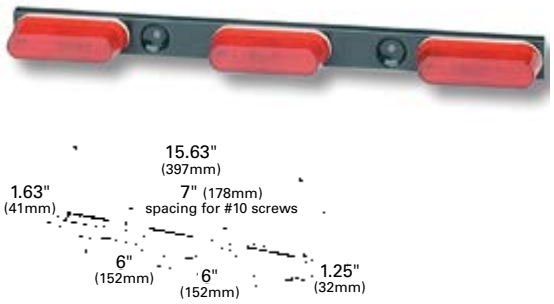

THIN-LINE BAR LAMP

Three bulb-replaceable 45252 lamps • Black powder-coated, formed steel bar

49062 Red

Material: Lens - Acrylic; Housing - Polycarbonate; Bar - Formed Steel
Regulations / Standards: FMVSS 108 / SAE P2
Finish: Red
Bulb: (3) #193, 2 CP
Volts / Amps: 12V / .99A
Replacement Lens: Red 90152
VMRS Code: 034-004-149

 © 2019 All Rights Reserved, Grote® Industries, Inc.

LOW-PROFILE BAR LAMP

Three-bulb, replaceable 45262 or 46792 lamps

49072 Red, Oval Style
49082 Red, Square Corner Style

Material: Lens and Housing - Polycarbonate; Housing and Bar - Polypropylene
Regulations / Standards: FMVSS 108 / SAE P2
Finish: Red
Bulb: (6) #1893, 2 CP
Volts / Amps: 12V / 1.98A
Lens: Oval - 90122; Square - 91962
VMRS Code: 034-004-149

49082

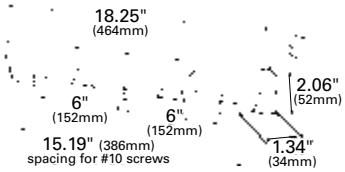

OEM-STYLE, LARGE AERODYNAMIC CAB MARKER LAMP

3/8" thick mounting gasket • Mounting holes interchange with most popular torpedo-type cab marker lamps • Chrome-plated body, long-life bulb • Used on Ford®, Navistar®, and Freightliner® trucks • Meets side marker and front clearance requirements simultaneously

46823 Yellow PC

Material: Lens - Polycarbonate; Housing - Chrome-Plated ABS
Regulations / Standards: FMVSS 108 / SAE P2, P3, PC
Finish: Chrome / Yellow
Bulb: #904, 4 CP
Volts / Amps: 12V / .69A
Lens: Yellow 92193
VMRS Code: 034-004-021

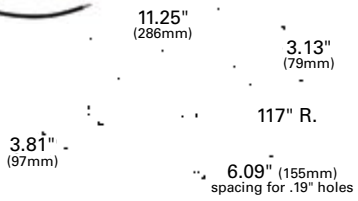

SUPERNOVA® SMALL AERODYNAMIC LED CAB MARKER LAMP

Meets side marker and front clearance requirements simultaneously

47183 Yellow PC

Material: Lens - Polycarbonate; Housing - Valox®
Regulations / Standards: FMVSS 108 / SAE P2, PC
Finish: Yellow
Volts / Amps: 12V / .12A
Accessory: Chrome Bezel: 92583
Lens: Yellow 92183
VMRS Code: 034-004-253

LED

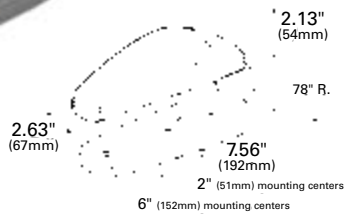

LOW-PROFILE AERODYNAMIC CAB MARKER LAMP

Aerodynamic design • Cab marker replacement for heavy-duty Ford® trucks • Field-replaceable lens • Mounting screws included

46003 Yellow
46003-5 Yellow RETAIL

Material: Polycarbonate
Regulations / Standards: FMVSS 108 / SAE P2, PC
Finish: Yellow
Volts / Amps: Bulb #168, 3 CP: 12V / .27A
Lens: Yellow 93393
VMRS Code: 034-004-021

LED

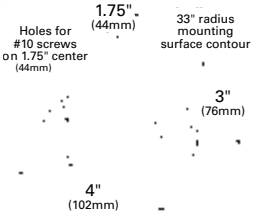

© 2019 All Rights Reserved, Grote® Industries, Inc.

LED

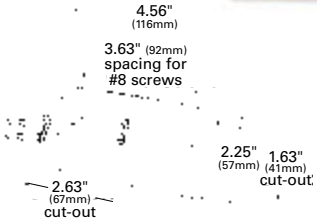

SUPERNOVA® FLUSH-MOUNT LED CAB MARKER LAMP

Potted for total circuit board protection • Sealed hardwire connections with UBS molded .180 bullet terminals • Freightliner®, Sterling®, and Navistar® replacement

47063 Yellow

Material: Polycarbonate
Regulations / Standards: FMVSS 108 / SAE P2
Finish: Yellow
Volts / Amps: 12V / .12A
VMRS Code: 034-004-253

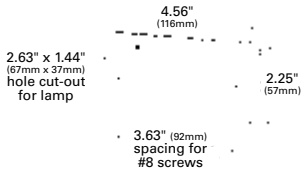

FLUSH-MOUNT CAB MARKER LAMP

Application for visors • Hermetic lens-to-housing seal • Used on Freightliner®

46913 Yellow

Material: Polycarbonate
Regulations / Standards: FMVSS 108 / SAE P2
Finish: Yellow
Pigtail: 68380
VMRS Code: 034-004-021

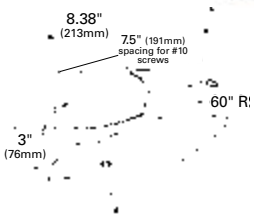

DELUXE DIE-CAST CAB MARKER LAMP

Easy installation • Neoprene mounting pad • Chrome-plated • Meets side marker and front clearance requirements simultaneously

45333 Yellow

Material: Lens - Acrylic; Housing - Chrome-Plated Zinc Die-cast
Regulations / Standards: FMVSS 108 / SAE P2, P3
Finish: Chrome / Yellow
Bulb: #67, 4 CP
Volts / Amps: 12V / .59A
Pigtail: 68080
VMRS Code: 034-004-021

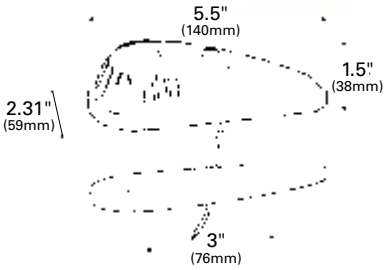

ECONOMY CAB MARKER LAMP

Fits flat or slight contour surfaces • Replaces original equipment on Ford® trucks • Meets side marker and front clearance requirements simultaneously

46543 Yellow PC
46543-5 Yellow PC RETAIL

Material: Lens - Acrylic; Housing - ABS
Regulations / Standards: FMVSS 108 / SAE P2, PC
Finish: Yellow
Bulb: #67, 4 CP
Volts / Amps: 12V / .59A
Pigtail: 68170
Lens: Yellow 91683
VMRS Code: 034-004-021

 © 2019 All Rights Reserved, Grote® Industries, Inc.

FORD® LIGHT DUTY CAB MARKER LAMP

Replaces surface mount, cab marker on Ford® F-Series trucks • Replaceable bulb design • Mounting pad and screws included

45503 Yellow PC

Material: Lens - Polycarbonate; Housing - ABS
Regulations / Standards: FMVSS 108 / SAE P2, PC
Finish: Yellow
Bulb: #194, 2 CP
Volts / Amps: 12V / .27A
VMRS Code: 034-004-021

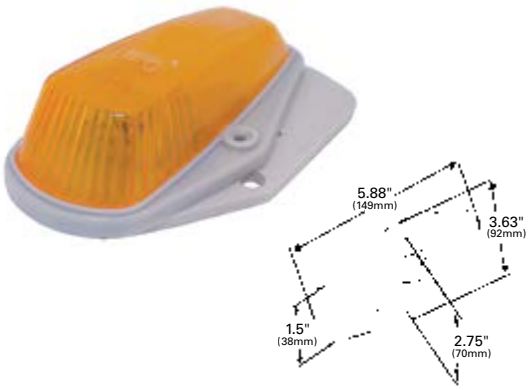

SHOCK-RESISTANT TORPEDO-STYLE CAB MARKER LAMP

Replacement for Mack® and Kenworth® • Includes two 1/4" bolts on 9 3/4" centers for mounting

45993 Yellow PC

Material: Lens - Acrylic; Housing - Chrome-Plated ABS
Regulations / Standards: FMVSS 108 / SAE P2, PC
Finish: Yellow
Bulb: #67, 4 CP
Volts / Amps: 12V / .59A
Lens: Yellow 92773
VMRS Code: 034-004-021

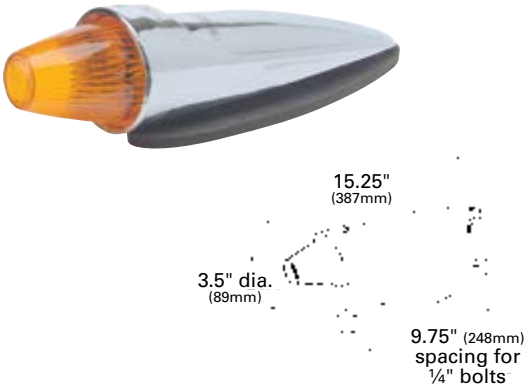

HI COUNT® SCHOOL BUS WEDGE LED MARKER LAMP

Potted circuit board • Mounting gasket included • Blunt cut, hardwire termination • 15 diodes in both red and yellow lamps • Meets PC when mounted at a 45° only

G5052 Red PC
G5053 Yellow PC
G5053-5 Yellow PC RETAIL

Material: Polycarbonate
Regulations / Standards: FMVSS 108 / SAE P2, PC
Finish: Red / Yellow
Volts / Amps: 12V / .1A
VMRS Code: 034-004-253

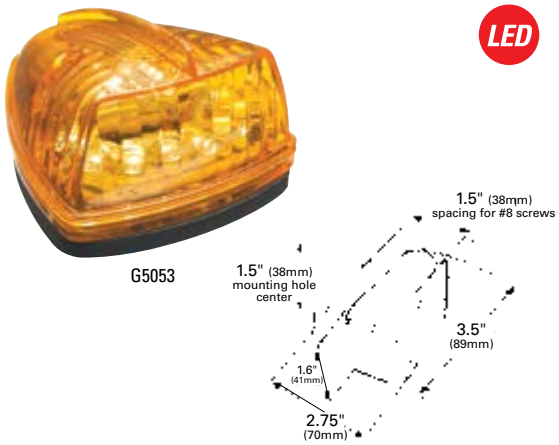

© 2019 All Rights Reserved, Grote® Industries, Inc.

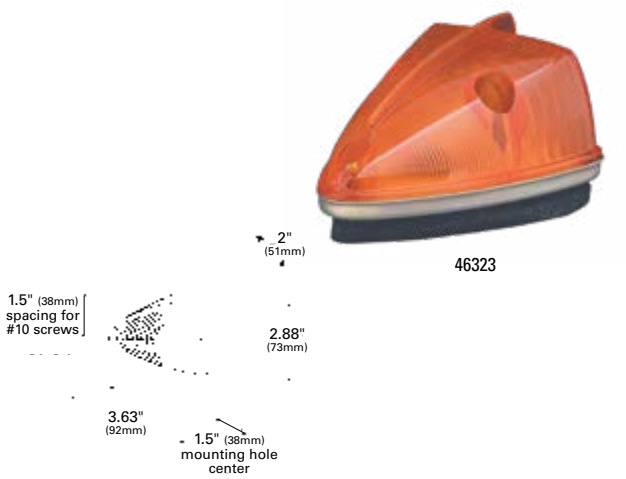

SCHOOL BUS WEDGE MARKER LAMP

Adaptable front/side/rear mount • Galvanized steel housing
• Fits most school bus applications

46322 Red
46323 Yellow

Material: Lens - Acrylic; Housing - Galvanized Steel
Regulations / Standards: FMVSS 108 / SAE P2
Finish: Red / Yellow
Bulb: #168, 3 CP
Volts / Amps: 12V / .35A
Lens: Red 99912, Yellow 99913
VMRS Code: 034-004-021

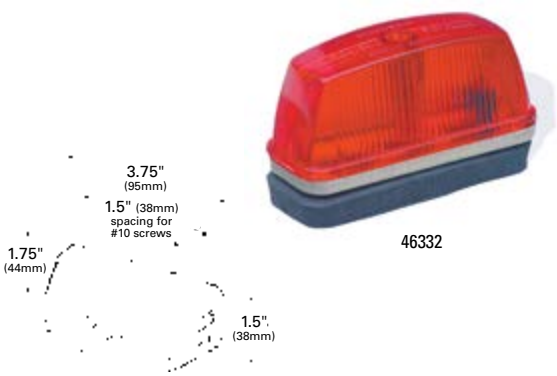

SCHOOL BUS RECTANGULAR MARKER LAMP

OEM-style • Fits most school bus applications • Includes mounting pad

46332 Red
46333 Yellow

Material: Lens - Acrylic; Housing - Zinc
Regulations / Standards: FMVSS 108 / SAE P2
Bulb: #168, 3 CP
Volts / Amps: 12V / .35A
Lens: Red 99802, Yellow 99803
VMRS Code: 034-004-021

 © 2019 All Rights Reserved, Grote® Industries, Inc.

FEMALE PIN CLEARANCE MARKER PIGTAILS

For more information on pigtail products see **Pigtails** section: page 254

SEALED MARKER LAMP PIGTAILS

DOUBLE SEAL:	
67001	6" Long, Ring Terminal Ground, Blunt Cut Wire
66850	6" Long, Chassis Ground
66851	6" Long, Ground Return
SINGLE SEAL:	
66801	6" Long, Ground Return
67050	6" Long, Ring Terminal Ground, Blunt Cut Wire
67050-5	6" Long, Ring Terminal Ground, Blunt Cut Wire RETAIL
66840	6" Long, Chassis Ground, Standard .180 Male
66800	6" Long, Chassis Ground, Slim-Line .180 Male

MALE PIN CLEARANCE MARKER PIGTAILS

CLEARANCE / MARKER PIGTAILS

66980	6" Long, Chassis Ground, Slim-Line .180 Male
66981	6" Long, Universal Replacement, Blunt Cut, Ring Terminal Grommet
66982	8" Long, Ground Return

THIN LINE CLEARANCE MARKER PIGTAILS

THIN-LINE LED PIGTAILS

66930	5" Long, Chassis Ground System
66931	6" Long, Ground Return

HIGH-MOUNT STOP LAMP PIGTAIL

66870	12 1/2" Long, Slim-Line .180 Male

TRIPLE-LAMP ID HARNESSES

66111	54" Long, Universal Triple-ID Jumper (31"x12"x12")
66932	60" Long, LED Triple-ID Jumper (36"x12"x12")

© 2019 All Rights Reserved, Grote® Industries, Inc.

TURTLEBACK® CLEARANCE MARKER PIGTAILS

For more information on pigtail products see **Pigtails** section: page 254

SEALED, ECONOMY CLEARANCE/ MARKER LAMP PIGTAIL

66360	6 3/4" Long w/ 3/8" Wire Strip

66360

TURTLEBACK® II DOUBLE-SEAL LAMP PIGTAILS

66910	6" Long, Chassis Ground, Slim-Line .180 Male
66911	6" Long, Ground Return, Standard .180 Male
67070	2 1/2" Long, Ground Wire, Standard .180 Male
67071	Two-Wire, Standard .180 Male

66910

66911

67070

67071

SENTRY LAMP PIGTAILS

66900	6" Long, Chassis Ground, Slim-Line .180 Male, 3 1/2" Ground, Star Ring Terminal
66904	6" Long, Ground Return, Slim-Line .180 Male
66905	6" Long, Chassis Ground, Slim-Line .180 Male

66900

66904

66905

SENTRY HIGH-MOUNT STOP PIGTAIL

66902	6" Long, Slim-Line .180 Male, 3" Ground, Star Ring Terminal

66902

STOP / TAIL / TURN THREE-WIRE PLUG-IN PIGTAILS FOR MALE PIN LAMPS

66815	6" Long, Ground Return, Slim-Line .180 Male
66841	8" Long, Chassis Ground, Slim-Line .180 Male
67002	11" Long, Chassis Ground, Blunt Cut Wire

66815

66841

67002

STOP / TAIL / TURN THREE-WIRE 90° PLUG-IN PIGTAILS FOR MALE PIN LAMPS

66816	6" Long, Ground Return System, 90° Plug, Slim-Line .180 Male
66845	8" Long, Chassis Ground, 90° Plug, Slim-Line .180 Male
67005	11" Long, Chassis Ground, 90° Plug, Blunt Cut Wires

66816

66845

67005

 © 2019 All Rights Reserved, Grote® Industries, Inc.

MICRONOVA® DOT MOUNTING

For more information on mounting products see **Mounting Options** section: page 264

HOODED MICRONOVA® DOT GROMMET

94360 Black

Material: PVC
Finish: Black

MICRONOVA® SECURITY PLATE

42063 Stainless Steel

Material: Stainless Steel
Finish: Stainless Steel

SURFACE MOUNT BRACKET FOR MICRONOVA® OR MICRONOVA DOT

42110	Gray
42120	Gray, Corner Radius Bracket

Material: Polycarbonate
Finish: Gray

MICRONOVA® DOT ROUND ADAPTER BRACKETS

42302	2" Round Grommet Adapter
42312	2.5" Round Grommet Adapter
42292	3" Round Flange Adapter
42282	3.5" Round Flange Adapter

MICRONOVA® SURFACE MOUNT BRACKET

42070 Gray

Material: Polycarbonate
Finish: Gray

MICRONOVA® DOT ADAPTER BRACKET

94350 Gray

Material: Polycarbonate
Finish: Gray

MICRONOVA® MOUNTING

MICRONOVA® OVAL BEZEL

42343 Stainless Steel Bezel

Material: Stainless Steel
Finish: Stainless Steel

MICRONOVA® LAMP BEZEL

93803 Chrome-Plated

Material: ABS
Finish: Chrome

© 2019 All Rights Reserved, Grote® Industries, Inc.

2" CLEARANCE MARKER MOUNTING

For more information on mounting products see **Mounting Options** section: page 264

RECESSED MOUNTING GROMMET FOR 2" ROUND LAMPS

92120	Open Grommet
92150	Closed Back Grommet
KITS:	
94100	Open Grommet (92120 + 67050)

Material: PVC
Finish: Black

THEFT-RESISTANT MOUNTING FLANGE FOR 2" ROUND LAMPS

43150	Gray, Polycarbonate
43152	Black, Polycarbonate
43153	Chrome-Plated, ABS

Material: Polycarbonate/ABS
Finish: Gray/Black/Chrome

SURFACE MOUNT BRACKET WITH GROMMET FOR 2" ROUND LAMPS

93760 Gray

Material: Polycarbonate
Finish: Gray
Grommet: 92120

LICENSE LAMP MOUNTING BRACKET

43040 White

Material: Polycarbonate
Finish: White

TWIST-IN SURFACE MOUNT BRACKET FOR 2" AND 2½" ROUND LAMPS

43690 Gray

Material: Polycarbonate
Finish: Gray

TWIST-IN SURFACE MOUNT BRACKET FOR 2" AND 2½" ROUND LAMPS

42180 Gray

Material: Polycarbonate
Finish: Gray

4 5/8" CORNER RADIUS SURFACE MOUNT BRACKET FOR 2" AND 2½" ROUND LAMPS

43760 Gray

Material: Polycarbonate
Finish: Gray

90° ANGLE MOUNTING BRACKET FOR 2" AND 2½" ROUND LAMPS

43532 Accommodates 94100, 92120, and 92150 Grommets (2 5/16" Hole)

Material: Steel
Finish: Black Enamel

 © 2019 All Rights Reserved, Grote® Industries, Inc.

2½" CLEARANCE MARKER MOUNTING

For more information on mounting products see **Mounting Options** section: page 264

RECESSED MOUNTING GROMMET FOR 2½" ROUND LAMPS

91400	Open Grommet
92070	Closed Back Grommet
KITS:	
94010	Open Grommet (91400 + 67050)

Material: PVC
Finish: Black

RECESSED MOUNTING GROMMET FOR 2½" ROUND LAMPS

91410	Open Grommet
KITS:	
94000	Open Grommet (91410 + 67050)

Material: PVC
Finish: Black

45° ANGLED BEVELED-EDGE RECESSED MOUNTING GROMMET FOR 2½" ROUND LAMPS

91880	Open Grommet
92920	Closed Back Grommet

Material: PVC
Finish: Black

SURFACE MOUNT GROMMET FOR 2½" ROUND LAMPS

91890	Open Grommet

Material: PVC
Finish: Black

THEFT-RESISTANT MOUNTING FLANGE FOR 2½" ROUND LAMPS

MOUNTING FLANGE:	
43160	Gray, Polycarbonate
43162	Black, Polycarbonate
43163	Chrome-Plated, ABS
PIGTAIL RETENTION CAP:	
93670	Gray

Material: Polycarbonate/ABS
Finish: Gray/Black/Chrome

SNAP-IN MOUNTING FLANGE FOR 2½" ROUND LAMPS

MOUNTING FLANGE:	
42170	Gray
SECURITY RING:	
43823	Stainless Steel

Material: Polycarbonate/Stainless Steel
Finish: Gray/Chrome

SURFACE MOUNTING BRACKET WITH GROMMET FOR 2½" ROUND LAMPS

93750	Gray

Material: Polycarbonate/PVC
Finish: Gray/Black

TWIST-IN SURFACE MOUNT BRACKET FOR 2" AND 2½" ROUND LAMPS

43690	Gray

Material: Polycarbonate
Finish: Gray

TWIST-IN SURFACE MOUNT BRACKET FOR 2" AND 2½" ROUND LAMPS

42180	Gray

Material: Polycarbonate
Finish: Gray

4 5/8" CORNER RADIUS SURFACE MOUNT BRACKET FOR 2" AND 2 ½" ROUND LAMPS

43760	Gray

Material: Polycarbonate
Finish: Gray

90° ANGLE MOUNTING BRACKET FOR 2" AND 2½" ROUND LAMPS

FOR 2 1/2" LAMPS:	
43512	Accommodates 94010, 91400, 92070 Grommets (2 25/32" Hole)
43522	Accommodates 94000, 91410 Grommets (3" Hole)
FOR 2" LAMPS:	
43532	Accommodates 94100, 92120, and 92150 Grommets (2 5/16" Hole)

Material: Steel
Finish: Black Enamel

© 2019 All Rights Reserved, Grote® Industries, Inc.

3" CLEARANCE MARKER MOUNTING

For more information on mounting products see **Mounting Options** section: page 264

GROMMET FOR SMALL RECTANGULAR LAMPS

91380 Black

Material: PVC
Finish: Black

BRACKET FOR SMALL RECTANGULAR LAMPS

94233 Chrome-Plated

KITS:

43970 Gray (+ 67050 pigtail)
43980 Chrome-Plated (+ 67050 pigtail)

Material: Polycarbonate/ABS
Finish: Chrome/Gray

HEADER-MOUNT BRACKET FOR SMALL RECTANGULAR LAMPS

KITS:

43380 White (42141 + 67050)

Material: Polycarbonate
Finish: White

LICENSE LAMP BRACKET FOR SMALL RECTANGULAR LAMPS

42162 Black

Material: Polycarbonate
Finish: Black

LICENSE LAMP MOUNTING BRACKET

43960 Gray
43962 Black

Material: Polycarbonate
Finish: Gray/Black

LAMP GUARD FOR SMALL RECTANGULAR LAMPS

43120 Aluminum

Material: Aluminum
Finish: Aluminum

3" – 5" CLEARANCE MARKER MOUNTING

MOUNTING BRACKET FOR LARGE RECTANGULAR LAMPS

43780 Gray Bracket
43783 Chrome-Plated Bracket, ABS

KITS:

43390 Gray (43780 + 66981)
43790 Gray (43780 + 66980)

Material: Polycarbonate/ABS
Finish: Gray/Chrome

LOW PROFILE MOUNTING BRACKET

43850 Gray

Material: Polycarbonate
Finish: Gray

THIN LINE CLEARANCE MARKER MOUNTING

THIN-LINE LED LAMP GUARD

43074 Aluminum

Material: Aluminum
Finish: Aluminum

 © 2019 All Rights Reserved, Grote® Industries, Inc.

REPLACEMENT LENSES

LENS MODEL NUMBER	FITS LAMP
90072	45662 45712 47262 47252
90073	45663 45713 47263 47253
90122	49072 46072
90123	46703
90152	45252 49062
90153	45253
90162	45412 49042
90163	45413
90172	45462 45442
90173	45463 45443
90202	45932 46712
90203	45933 46713
90303	45023
90922	46282 46892
90923	46283 46293 46893

LENS MODEL NUMBER	FITS LAMP
91042	46302
91043	46303
91572	45262 45432 49072
91573	45263 45433
91683	46543
91962	46782 46792 G4602 G4602-5
91963	46783 46793 G4603
91964	46792 46792-5 46793 46793-5 46782 46783
92183	47183
92193	46823
92433	46883
92773	45993
99802	46332
99803	46333
99912	46322
99913	46323

90062, 90063

90072, 90073

90122, 90123

90152, 90153

90162, 90163

90172, 90173

90202, 90203

90303

90922, 90923

91042, 91043

91572, 91573

91683

91962, 91963, 91964

92183

92193

92432, 92433

92773

99802, 99803

99912, 99913

Ford® is a registered trademark of Ford Motor Company CORPORATION DELAWARE; Kenworth® is a registered trademark of PACCAR, Inc.; Freightliner® is a registered trademark of Daimler Trucks North America, LLC; Navistar® is a registered trademark of Navistar International Corporation; Deutsch® is a registered trademark of TE Connectivity Corporation; Truck-Lite® is a registered trademark of TRUCK-LITE CO., LLC; Metri-Pack® is a registered trademark of Aptiv Technologies Limited COMPANY BARBADOS; Valox® is a registered trademark of SABIC INNOVATIVE PLASTICS IP B.V.; Mack®; Sterling®.

All product and company names are trademarks™ or registered® trademarks of their respective holders. Use of them does not imply any affiliation with or endorsement by them.

02

STOP/TAIL/ TURN LAMPS

FEUX ARRÊT / ARRIÈRE / DIRECTION

LÁMPARAS DE FRENO / CUARTO / DIRECCIONAL

 © 2019 All Rights Reserved, Grote® Industries, Inc.

SUPERNOVA® 4" LED STOP/TAIL/TURN LAMP

Advanced pin connection system uses tin-plated, solid-brass pin terminals
- Uses same UBS pigtail as male pin incandescent

STOP/TAIL/TURN:

53252	Red, Grommet Mount, Male Pin
53272	Red, Gray Theft-Resistant Flange, Male Pin
53282	Red, White Theft-Resistant Flange, Male Pin
53292	Red, Black Theft-Resistant Flange, Male Pin
53302	Red, Stainless Steel Theft-Resistant Flange, Male Pin
52092	Red, Grommet Mount, Male Pin 24 VOLT
54622	Red, Integrated Flange w/ Gasket, Male Pin
53552	Red, Grommet Mount, Hard Shell
54032	Red, Gray Snap-In Flange, Hard Shell
54042	Red, Stainless Steel Snap-In Flange, Hard Shell
53532	Red, Grommet Mount, Hardwire

STOP/TAIL/TURN KITS:

53462	Red, Male Pin, (53252 + 91740 + 67002)
53432	Red, Male Pin, (53302 + 67002)

AUXILIARY:

53253	Yellow, Grommet Mount, Male Pin
52093	Yellow, Grommet Mount, Male Pin 24 VOLT
53293	Yellow, Black Theft-Resistant Flange, Male Pin
53303	Yellow, Stainless Steel Theft-Resistant Flange, Male Pin
53553	Yellow, Grommet Mount, Hard Shell

Material: Lens - Acrylic; Housing - ABS; Flange - Polycarbonate / Stainless Steel
Regulations / Standards: FMVSS 108 / S/T/T - SAE I, P2, S, T; Auxiliary - SAE P2
Finish: Red / Yellow
Volts / Amps: Red: 12V / .306A (I, S) / .013A (T); 24V / .12A (I, S) /.0056A (T)
Yellow: 12V / .12A (P2); 24V / .12A (P2)
Bracket: 93552, 43253, 92510, 92512, 92513, 43572, 43642, 43655, 43732, 93190, 93553, 93683, 92511, 51090
Grommet: 91740, 91950
Pigtail: Male Pin: 66815, 67002, 66841, 66816, 67005, 66845
Hard Shell: 66861, 66862
VMRS Code: 034-002-059

LED

53252

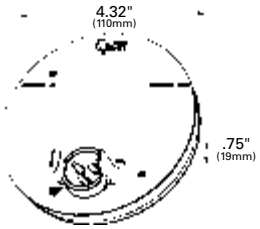

53303

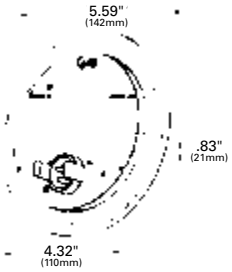

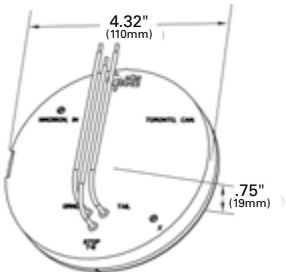

54622

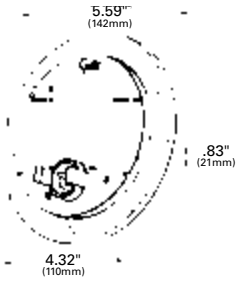

© 2019 All Rights Reserved, Grote® Industries, Inc.

LED

4" LED STOP/TAIL/TURN WITH INTEGRATED BACK-UP LAMP

Innovative, patented design combines all stop/tail/turn and back-up functions into one industry standard size lamp • Symmetrical design meets legal requirements at any mounting angle • Reduces inventory, SKUs, and carrying costs

55162 Red, Hard Shell
55202 Red, Stainless Steel, Theft Resistant Flange, Hardshell
55212 Red, Gray, Theft Resistant Flange, Hardshell

Material: Lens - Red / Clear Polycarbonate;
Housing - Black Polycarbonate / ABS blend;
Flange - Stainless Steel / Polycarbonate
Regulations / Standards: FMVSS 108 / SAE I, S, T, R2
Volts / Amps: 12.8 / 1.85A (S) / .22 (T) / 3.06 (BU) (±15%) @ 14V
Pigtail: 66863, 66864, 66865
Bracket: 93683, 93552, 92510, 93190, 43572, 43655, 43642, 93553, 92512, 43732, 51090, 92513, 92511, 43253
Grommet: 91740, 91950
VMRS Code: 034-002-059

LED

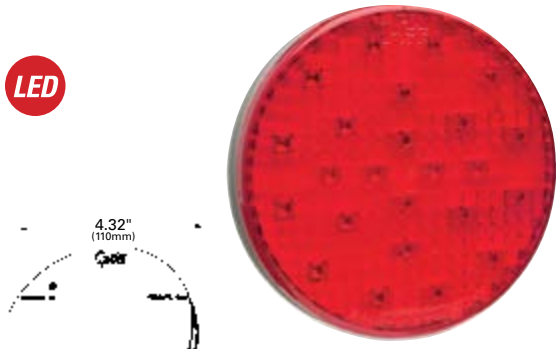

SUPERNOVA® 4" FULL-PATTERN LED STOP/TAIL/TURN LAMP

• Advanced pin connection system uses tin-plated, solid-brass pin terminations

STOP/TAIL/TURN:

53312 Red, Grommet Mount, Male Pin
52162 Red, Grommet Mount, Male Pin 24 VOLT
53182 Red, Black Theft-Resistant Flange, Male Pin
53192 Red, Stainless Steel Theft-Resistant Flange, Male Pin
54562 Red, Grommet Mount, Hard Shell

3 PIN REAR TURN:

53413 Yellow, Grommet Mount, Male Pin
52163 Yellow, Grommet Mount, Male Pin 24 VOLT

FRONT PARK/TURN:

53313 Yellow, Grommet Mount, Male Pin

2 PIN REAR TURN:

55103 Yellow, Grommet Mount, Male Pin

Material: Lens - Acrylic; Housing - ABS
Regulations / Standards: FMVSS 108 / S/T/T - SAE I, P2, S, T;
Rear Turn - SAE I; Front SAE P / T - I, P
Finish: Red / Yellow
Volts / Amps: Red - 12V / .48A (I,S) / .04A (P2,T),
Rear Turn - 12V / .71A (I) / .14A (P2)
Front P/T - 12V / 1.06A (I) / .13A (P,P2)
Red - 24V / .2A (I,S) / .02A (P2,T)
Yellow - 24V / .34A (I) / .06A (P2)
Bracket: 93552, 43253, 92510, 92512, 92513, 43572, 43642, 43655, 43732, 93190, 93553, 93683
Grommet: 91740, 91950
Pigtail: Male Pin: 66815, 67002, 66841, 66816, 67005, 66845
Hard Shell: 66861, 66862
VMRS Code: 034-002-059

 © 2019 All Rights Reserved, Grote® Industries, Inc.

SUPERNOVA® 4" NEXGEN LED STOP/TAIL/TURN

Uses existing pigtails and wiring for cost-effective retrofit • 20% less current draw than major competitor LED products • Fits all Grote® bracket and grommet mounting options • Similar look to incandescent light which helps prevent theft

STOP/TAIL/TURN:

54302	Red, Grommet Mount, Male Pin, Multi Volt	
54332	Red, Grommet Mount, Male Pin	
54472	Red, Gray Flange, Male Pin	
54482	Red, Black Flange, Male Pin	
54492	Red, Stainless Steel Flange, Male Pin	
54602	Red, Integrated Flange w/ Gasket, Male Pin	ECE
54362	Red, Grommet Mount, Hard Shell	
54292	Red, Grommet Mount, Hard Shell	MULTI
54573	Red, Integrated Flange, Hard Shell	MULTI ECE

AUXILIARY:

54313	Yellow, Grommet Mount, Front & Rear Turn, Hard Shell
54333	Yellow, Grommet Mount, Male Pin
54493	Yellow, Stainless Steel Flange, Male Pin
54363	Yellow, Grommet Mount, Hard Shell

2-PIN TURN LAMP:

54643	Yellow, Grommet Mount, Male Pin

Material: Lens - Acrylic; Housing - ABS
Regulations / Standards: FMVSS 108, ECE Reg7 SI, RI (54602); Reg6 2A (54573) / S/T/T - SAE I, P2, S, T; Auxiliary- SAE P2
Finish: Red / Yellow
Volts / Amps: 12V / .24A (I,S)/.03A (T)
Bracket: 93552, 43253, 92510, 92511, 92512, 92513, 43572, 43642, 43655, 43732, 93190, 93683, 51090
Grommet: 91740, 91950
Pigtail: Male Pin: 66815, 67002, 66841, 66816, 67005, 66845; Hard Shell: 66861, 66862
VMRS Code: 034-002-059

LED

54332

54313

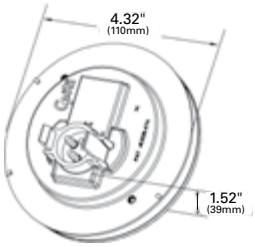

54602

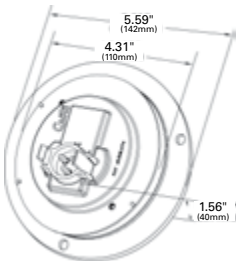

HI COUNT® 4" LED STOP/TAIL/TURN LAMP

Standard female connection accepts all popular plug-in connectors • Concentric, high-count diode design: 24 in red, 39 in yellow • Fits all popular mountings and grommets

STOP/TAIL/TURN:

G4002	Red, PL3	
G4002-5	Red, PL3	RETAIL
G4022	Red, Clear Lens, PL3	
G4023	Yellow, Clear Lens, PL3	

STOP/TAIL/TURN KIT:

G4012	Red (G4002 + 91740 + 67090)

AUXILIARY:

G4003	Yellow, PL3

Material: Lens - Acrylic; Housing - ABS
Regulations / Standards: FMVSS 108 / Red - SAE I, P2, S, T; Yellow - Auxiliary
Finish: Red / Yellow
Volts / Amps: Red - 12V / .48A (I, S) / .04A (P2, T); Yellow - 12V / .71A (I)
Bracket: 93552, 43253, 92510, 92511, 92512, 92513, 43572, 43642, 43655, 43732, 93190, 93683, 51090
Grommet: 91740, 91950
Pigtail: 66825, 67000, 66812, 66844, 66843, 66811, 67090
VMRS Code: 034-002-059

LED

G4002

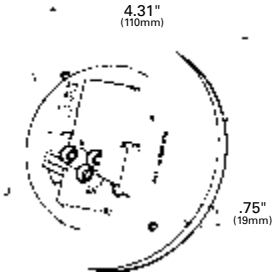

© 2019 All Rights Reserved, Grote® Industries, Inc.

LED

54342

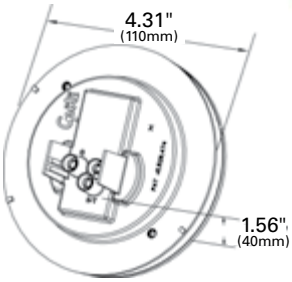

GROTE SELECT® 4" LED STOP/TAIL/TURN

Longer life and less current draw than standard incandescent lamps leaves more voltage available to other vehicle systems • Uses existing pigtails and wiring for cost-effective retrofit • Similar look to incandescent light which helps prevent theft

54342 Red, Female Pin
54342-5 Red, Female Pin RETAIL
54343 Yellow, Female Pin
54282 Red, Female Pin, Grommet Mount MULTI

Material: Lens - Acrylic; Housing - ABS
Regulations / Standards: FMVSS 108 / S/T/T- I, SAE P2, S, T; Auxiliary - SAE P2
Finish: Red / Yellow
Volts / Amps: 12V / .24A (I, S) / .03A (T)
Bracket: 93552, 43253, 92510, 92511, 92512, 92513, 43572, 43642, 43655, 43732, 93190, 93553, 93683, 51090
Grommet: 91740, 91950
Pigtail: 66825, 67000, 66812, 66844, 66843, 66811, 67090
VMRS Code: 034-002-059

53102

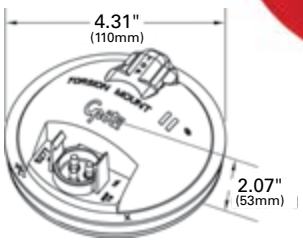

TORSION MOUNT® II 4" STOP/TAIL/TURN LAMP

Torsion Mount® II Gel-Mount®, bulb cradle design • Heavy-duty bulb provides greater reliability • O-ring seal and male pin design reduce corrosion • Locking tabs ensure solid pigtail connection

STOP/TAIL/TURN:

53100 Red, Clear Housing, Male Pin
53102 Red, Male Pin
52770 Red, Clear Housing, Female Pin
52772 Red, Female Pin
52152 Red, Female Pin 24 VOLT

STOP/TAIL/TURN KIT:

53112 Red, Male Pin (53102 + 91740 + 67002)
52782 Red, Female Pin (52772 + 91740 + 67000)

FRONT PARK/TURN:

53103 Yellow, Male Pin
52773 Yellow, Female Pin

BUILT-IN REFLECTOR:

52672 Red, Female Pin
52682 Red, Female Pin (52672 + 91740 + 67000)

53103

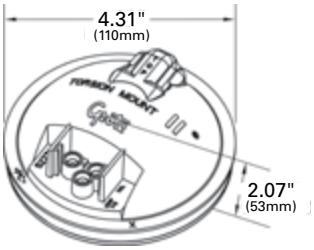

Material: Polycarbonate
Regulations / Standards: FMVSS 108 / SAE I, S, T (52770); Red - SAE I, P2, S, T; Yellow - SAE I, P
Finish: Red / Yellow
Bulb: 2057, 32/2 CP
Volts / Amps: Red: 12V / 2.1A (I, S) /.48A (P2, T)
Yellow: 12V / 2.1A (I) /.48A (P)
Bracket: 43572, 43253, 92510, 92512, 92513, 43642, 43655
Grommet: 91740, 91950
Pigtail: Male Pin: 66815, 67002, 66841, 66816, 67005, 66845, 66842, 66846; Female Pin: 66825, 67000, 66812, 66844, 66843, 66811, 67090, 67014, 67020
VMRS Code: 034-002-058

 © 2019 All Rights Reserved, Grote® Industries, Inc.

4" ECONOMY STOP/TAIL/TURN LAMP

Standard female connection • Fits all competitive pigtails, brackets and grommets

STOP/TAIL/TURN:

52922 Red, Female Pin
52922-5 Red, Female Pin RETAIL

STOP/TAIL/TURN KIT:

53012 Red, Female Pin (52922 + 91740 + 67090)
53012-5 Red, Female Pin (52922 + 91740 + 67090) RETAIL

FRONT PARK/TURN:

52923 Yellow, Female Pin

Material: Polycarbonate
Regulations / Standards: FMVSS 108 / Red - SAE I, P2, S, T; Yellow - SAE I, P
Finish: Red / Yellow
Bulb: 2057, 32/2 CP
Volts / Amps: 12V / 2.1A (I, S) / .48A (T, P, P2)
Bracket: 43572,92510, 92512, 92513
Grommet: 91740, 91950
Pigtail: 66825, 67000, 66812, 66844, 66843, 66811, 67090
VMRS Code: 034-002-058

52922

52923

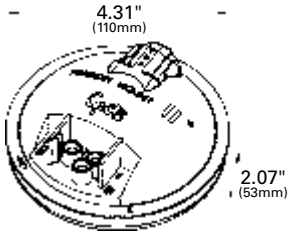

GROTE SELECT® LED STOP/TAIL/TURN POWER MODULE WITH SIDEMARKER

Heavy-gauge steel plate and can • Pre-assembled with wiring • Uses Grote Select® 4" LED lamps • Exceeds SAE J914, Nov. '87 • Includes reflector

51002 Red, Male Pin, RH
51012 Red, Male Pin, LH

Material: Lens - Acrylic; Housing - Steel; Grommet - PVC
Regulations / Standards: FMVSS 108 / SAE A, I, P2, S, T
Finish: Gray/Red
Volts / Amps: 12V / .24A (I, S) / .06A (P2) / .03A (T)
Accessory: Lamp: S/T/T 53252; Marker: 47092
Grommet: 91740
VMRS Code: 034-002-022

LED

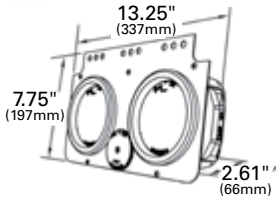

STOP/TAIL/TURN 4" LAMP POWER MODULE

Heavy-gauge steel plate and can • Torsion Mount® II 4" round sealed lamps • Right or left hand application • Includes reflector

51052 Red

Material: Material: Lens - Polycarbonate; Housing - Steel; Grommet - PVC
Regulations / Standards: FMVSS 108 / SAE A, I, P2, S, T
Finish: Gray / Red
Bulb: 2057, 32/2 CP
Volts / Amps: 12V / 2.1A (I) / 2.1A (S) / .48A (P2) / .48A (T)
Accessory: Lamp: S/T/T - Red: 52922
Bracket: 51090
Grommet: 91740
VMRS Code: 034-002-022

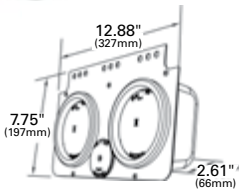

© 2019 All Rights Reserved, Grote® Industries, Inc.

STOP/TAIL/TURN 4" LAMP POWER MODULE WITH SIDEMARKER

Heavy-gauge steel plate and can • Includes reflector

51022 Red, RH
51032 Red, LH

Material: Lens - Polycarbonate; Housing - Steel; Grommet - PVC
Regulations / Standards: FMVSS 108 / SAE A, I, P2, S, T
Finish: Gray
Volts / Amps: Bulb 2057, 32/2 CP: 12V / 2.1A (I,S) /.48A (P2,T)
Bulb 193 (2), 2 CP: 12V / .54A (P2)
Accessory: Lamps: S/T/T 52922; Marker: 46742
Grommet: 91740
VMRS Code: 034-002-022

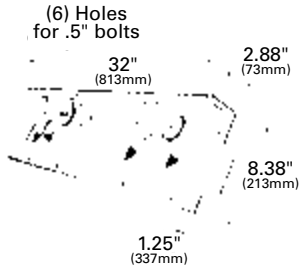

POWER UNIT MODULE

Heavy-gauge steel plate and can • Torsion Mount® II 4" round female pin S/T/T lamps • Pre-assembled wiring harness and 5-way connector • Includes reflector

50820 Female Pin Lamps

Material: Lens - Polycarbonate ; Housing - Stainless Steel
Regulations / Standards: FMVSS 108 / SAE A, I, L, R, S, T
Finish: Black
Volts / Amps: Bulb 2057 (2), 32/2 CP: 12V - 4.2A (I,S) /.96A (P2,T)
Bulb 2057, 32/2 CP: 12V / 2.1A (R)
Bulb 193 (2), 2 CP: 12V / .66A (L)
Accessory: Lamp: S/T/T - Female Pin 52772; Back-up - Female Pin 62271; License - 62271; License Bracket 43780; Reflector - 40092; Grommet: 91740
VMRS Code: 034-002-022

PLASTIC HOUSING LAMP

Snap-ring lens application • 2-wire pigtail

DOUBLE CONTACT:

50222 Red

Material: Lens - Acrylic; Housing - Polypropylene
Regulations / Standards: FMVSS 108 / SAE I, P2, P3, S, T
Finish: Red / Black
Bulb: 1157, 32/3 CP
Volts / Amps: 12V / 2.1A (I,S) /.59A (P2,P3,T)
Accessory: Snap Ring 99593
Pigtail: 68130
Lens: Red 90012
VMRS Code: 034-002-058

 © 2019 All Rights Reserved, Grote® Industries, Inc.

RUBBER HOUSING LAMP

Lens held in by rubber flange • Standard exterior wiring • Brass eyelets in two mounting holes

DOUBLE CONTACT:

50502 Red

Material: Lens - Acrylic; Housing - Rubber
Regulations / Standards: FMVSS 108 / SAE I, P2, P3, S, T
Finish: Red / Black
Bulb: 1157, 32/3 CP
Volts / Amps: 12V / 2.1A (I, S) /.59A (P2, P3, T)
Pigtail: 68150
Lens: Red 90012
VMRS Code: 034-002-058

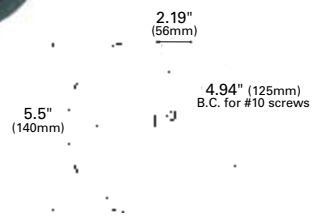

ECONOMY STAINLESS STEEL HOUSING LAMP

Easy snap-on lens • Rugged stainless steel construction

DOUBLE CONTACT:

52522 Red

Material: Lens - Polycarbonate; Housing - Stainless Steel
Regulations / Standards: FMVSS 108 / SAE I, P2, P3, S, T
Finish: Red / Stainless
Bulb: 1157, 32/3 CP
Volts / Amps: 12V / 2.1A (I, S) / .59A (P2, P3, T)
Pigtail: 68150
Lens: Red 90762
VMRS Code: 034-002-058

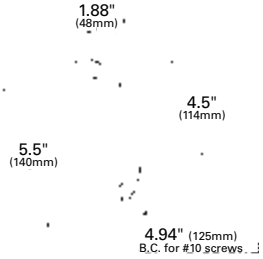

ECONOMY STEEL HOUSING LAMP

Easy snap-on lens • Rugged steel construction

DOUBLE CONTACT:

50232 Red
50232-5 Red RETAIL

Material: Lens - Acrylic; Housing - Steel
Regulations / Standards: FMVSS 108 / Double - SAE I, P2, P3, S, T; Single - SAE I, S
Finish: Red / Black
Volts / Amps: Bulb 1156, 32 CP: 12 V - 2.1(I, S) / .59A(T)
Bulb 1157, 32/3 CP: 12V / 2.1A (I, S) / .59A (P2, P3, T)
Accessory: Snap Ring 99595
Pigtail: 68130, 68150
Lens: Red 90012
VMRS Code: 034-002-058

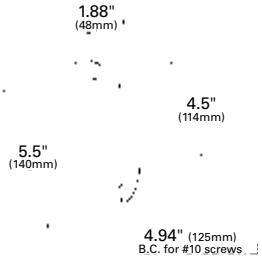

© 2019 All Rights Reserved, Grote® Industries, Inc.

LED

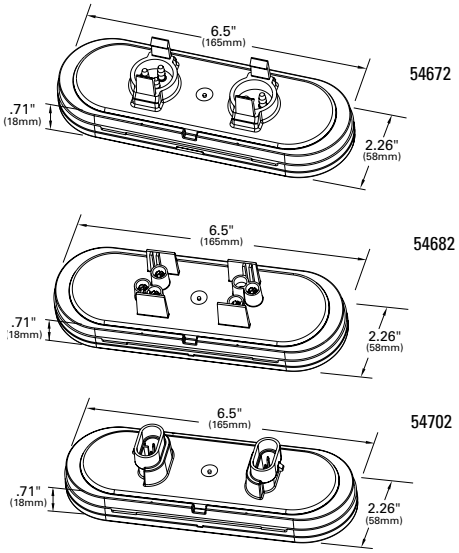

OVAL LED STOP/TAIL/TURN WITH INTEGRATED BACK-UP LAMP

Innovative patented design combines all stop/tail/turn and back-up functions into one industry standard size lamp • Symmetrical design meets legal requirements at any mounting angle • LED technology provides less maintenance costs and long life • Industry-standard design fits existing mounting grommets, brackets, and flanges • Reduces inventory, SKUs, and carrying costs • Patented design

54672 Red, Male Pin
54682 Red, Female Pin
54702 Red, Hard Shell

Material: Red High-Impact Acrylic, Clear Polycarbonate
Regulations / Standards: FMVSS 108 / SAE I, S, T, R2
Volts / Amps: 12V / 0.13A (I, S), 0.17A (T), 0.16A (R)
Pigtail: 66863, 66864, 66865
Bracket: 93683, 93552, 92510, 93190, 43572, 43655, 43642, 93553, 92512, 43732, 51090, 92513, 92511, 43253
Grommet: 91740, 91950
VMRS Code: 034-002-059

LED

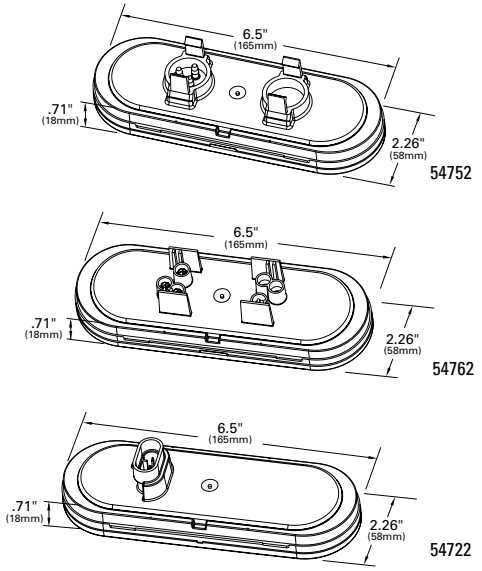

OVAL LED STOP/TAIL/TURN WITHOUT INTEGRATED BACK-UP LAMP

Thin profile design minimizes chance of external impact damage • Industry-standard design fits existing mounting grommets, brackets, and flanges • Symmetrical design meets legal requirements at any mounting angle

54722 Red, Hard Shell
54752 Red, Male Pin
54762 Red, Female Pin

Material: Red High-Impact Acrylic
Regulations / Standards: FMVSS 108 / SAE I, S, T
Voltage Amp: 12V / 0.13A (I, S), 0.17A (T)
Pigtail: 66863, 66864, 66865
Bracket: 93683, 93552, 92510, 93190, 43572, 43655, 43642, 93553, 92512, 43732, 51090, 92513, 92511, 43253
Grommet: 91740, 91950
VMRS Code: 034-002-059

 © 2019 All Rights Reserved, Grote® Industries, Inc.

SUPERNOVA® OVAL LED STOP/TAIL/TURN LAMP

Male pin connection for maximum moisture and corrosion protection
- Meets specifications for vertical and horizontal mounting

STOP/TAIL/TURN:

53962	Red, Grommet Mount, Male Pin
53592	Red, Gray Theft-Resistant Flange, Male Pin
53622	Red, Black Theft-Resistant Flange, Male Pin
53972	Red, Stainless Steel Theft-Resistant Flange, Male Pin
52072	Red, Grommet Mount, Male Pin 24 VOLT
54802	Red, Clear Lens, Grommet Mount, Hard Wired

STOP/TAIL/TURN KIT:

53122	Red (53962 + 92420 + 67005)

AUXILIARY:

53963	Yellow, Grommet Mount, Male Pin
53593	Yellow, Gray Theft-Resistant Flange, Male Pin
53973	Yellow, Stainless Steel Theft-Resistant Flange, Male Pin
52073	Yellow, Grommet Mount, Male Pin 24 VOLT

AUXILIARY KITS:

53123	Yellow (53963 + 92420 + 67005)

Material: Lens - Acrylic; Housing - ABS
Regulations / Standards: FMVSS 108 / Red - SAE I, P2, S, T; Yellow - SAE P2
Finish: Red / Yellow
Volts / Amps: Red: 12V / .48A (I, S) /.06A (T), 24V / .48A (I, S) /.06A (T)
Yellow: 12V / .48A, 24V / .48A
Bracket: 43362, 43952, 43220, 43223, 43222, 43100, 43723, 42152, 42153, 43172
Grommet: 92420, 92720
Pigtail: Male Pin: 66815, 67002, 66841, 66816, 67005, 66845
Male Pin 2-Wire: 66842, 67013, 66846, 67016
VMRS Code: 034-002-059

53962

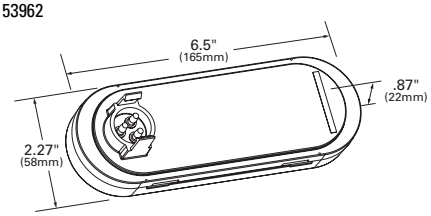

53973

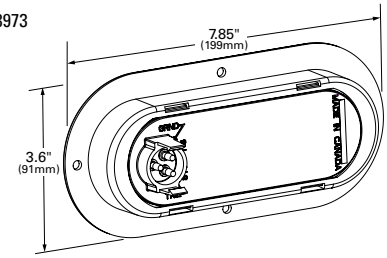

SUPERNOVA® OVAL LED STOP/TAIL/TURN LAMP

Available in male pin, hard shell, and hardwired connection options for easy retrofit or replacement • Fits current mounting flanges and grommets

54132	Red, Male Pin
54133	Yellow, Male Pin
54142	Red, Hard Shell
54143	Yellow, Hard Shell
54792	Red, Hardwire

Material: Lens - Acrylic; Housing - ABS
Regulations / Standards: FMVSS 108 / SAE I6, P, S, T, P2
Finish: Red/Yellow
Volts / Amps: 13.5V / .02A (T) /.14A (I, S)
Accessory: Chrome Bezel 42153
Bracket: 43362, 43952, 43220, 43223, 43222, 43100, 43723, 42152, 42153, 43132
Grommet: 92420, 92720
Pigtail: Male Pin: 66815, 67002, 66841, 66816, 67005, 66845
Hard Shell: 66861, 66862
VMRS Code: 034-002-059

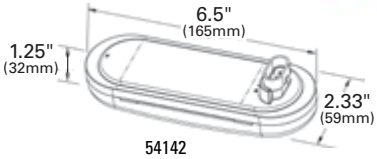

54142

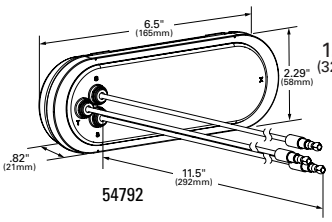

54792

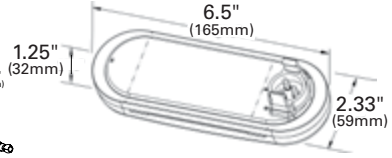

54133

© 2019 All Rights Reserved, Grote® Industries, Inc.

LED

54162

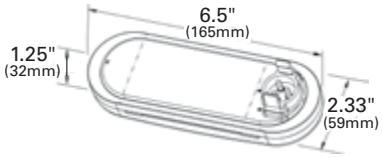

SUPERNOVA® NEXGEN OVAL LED STOP/TAIL/TURN LAMP

Available in male pin and hardwire for retrofit or replacement
- Fits current mounting flanges and grommets

STOP/TAIL/TURN:

54162 Red, Male Pin

AUXILIARY:

54163 Yellow, Male Pin

Material: Lens - Acrylic; Housing - ABS
Regulations / Standards: FMVSS 108 / SAE I6, P, S, T, P2
Finish: Red/Yellow
Volts / Amps: 13.5V / .02A (T) /.14A (I, S)
Bracket: 43362, 43952, 43220, 43223, 43222, 43100, 43723, 42152, 42153
Grommet: 92420, 92720
Pigtail: 66815, 67002, 66841, 66816, 67005, 66845
VMRS Code: 034-002-059

LED

G6002

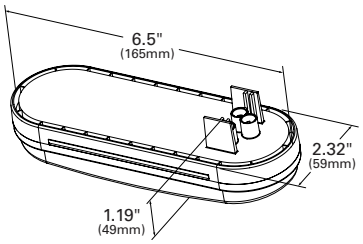

HI COUNT® OVAL LED STOP/TAIL/TURN LAMP

Female pin connection accepts all popular plug-in connectors • Fits same connections as female incandescent lamps • LEDs provide faster stop warning for trailing vehicles

G6002 Red, 36 Diodes, PL3
G6002-5 Red, 36 Diodes, PL3 RETAIL
G6003 Yellow, 48 Diodes, PL3
G6012 Red, Clear Lens, 36 Diodes, PL3
G6013 Yellow, Clear Lens, 48 Diodes, PL3

Material: Polycarbonate
Regulations / Standards: FMVSS 108 / SAE I, S, T, P, P2
Finish: Red / Yellow
Volts / Amps: Red - 14V / .33A (I, S) / .015A (T)
Yellow - 14V / 36A (T) / .03A (P)
Bracket: 43362, 43952, 43220, 43223, 43222, 43100, 43723, 42152, 42153, 43173
Grommet: 92420, 92720
Pigtail: 67090, 67000, 66812, 66811, 66825, 66843, 66844
VMRS Code: 034-002-059

LED

54172

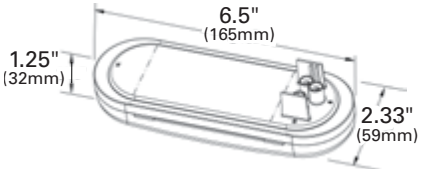

GROTE SELECT® OVAL LED STOP/TAIL/TURN LAMP

Fits current mounting flanges and grommets • Female pin connection accepts all popular connectors

STOP/TAIL/TURN:

54172 Red

AUXILIARY:

54173 Yellow

Material: Lens - Acrylic; Housing - ABS
Regulations / Standards: FMVSS 108 / SAE I6, P, S, T, P2
Finish: Red/Yellow
Volts / Amps: Red 12V / .48A (I,S) /.04A (P2, T); Yellow 12V / .71A (I)
Bracket: 43362, 43952, 43220, 43223, 43222, 43100, 43723, 42152, 42153, 43173
Grommet: 92420, 92720
Pigtail: 66825, 67000, 66812, 66844, 66843, 66811, 67090
VMRS Code: 034-002-059

 © 2019 All Rights Reserved, Grote® Industries, Inc.

OVAL LED STOP/TAIL/TURN LAMP

Mounted vertical, horizontal, or 45° degrees • Impact-resistant

52592-5 Chrome Trim Ring, Red

Material: Polycarbonate
Regulations / Standards: FMVSS 108 / SAE I, S, T
Color: Red
Voltage Amp: 12V / .22A (I, S) / .04A (T)
VMRS Code: 034-002-059

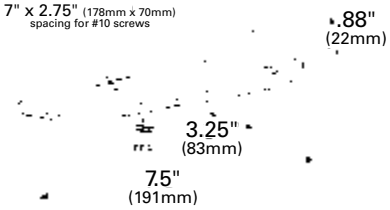

TORSION MOUNT® III OVAL STOP/TAIL/TURN LAMP

Torsion Mount® III, Gel-Mount® bulb cradle design minimizes bulb vibration
• Locking tabs ensure solid pigtail connection

STOP/TAIL/TURN:

52562 Red, Male Pin
52892 Red, Female Pin

STOP/TAIL/TURN KIT:

52572 Red, Female Pin (52892 + 92420 + 67000)

FRONT PARK/TURN:

52563 Yellow, Male Pin
52893 Yellow, Female Pin

Material: Lens and Housing - Polycarbonate; Grommet - PVC (Kits)
Regulations / Standards: FMVSS 108 / Red - SAE I, P2, S, T; Yellow - SAE I, P
Finish: Red / Yellow
Bulb: 1157, 32/3 CP
Volts / Amps: 12V / 2.1A (I, S) /.59A (P, P2, T)
Bracket: 43362, 43952, 43220, 43223, 43222, 43100, 43723, 42152, 42153
Grommet: 92420, 92720
Pigtail: Male Pin: 66815, 66841, 66816, 67005, 66845, 67013, 67016, 66847, 66846
Female Pin: 66825, 67000, 66812, 67090
VMRS Code: 034-002-058

52562

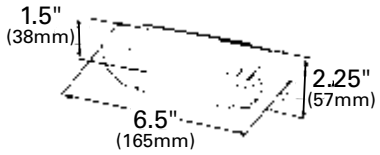

53563

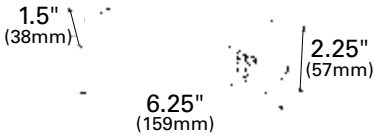

52892

© 2019 All Rights Reserved, Grote® Industries, Inc.

52182

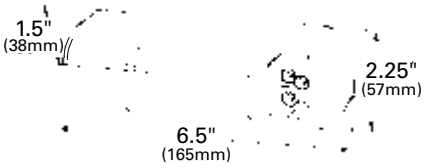

ECONOMY OVAL STOP/TAIL/TURN LAMP

Female pin connection • Available in both red and yellow

STOP/TAIL/TURN:

52182 Red
52182-5 Red RETAIL

STOP/TAIL/TURN KIT:

53092 Red (52182 + 92420 + 67090)

FRONT PARK/TURN:

52183 Yellow

FRONT PARK/TURN KIT:

53093 Yellow (52183 + 92420 + 67090)

Material: Polycarbonate
Regulations / Standards: FMVSS 108 / Red - SAE I, P2, S, T; Yellow - SAE I, P
Finish: Red / Yellow
Bulb: 1157, 32/3 CP
Volts / Amps: 12V / 2.1A (I, S) / .59A (P, P2, T)
Bracket: 43362, 43952, 43220, 43223, 43222, 43100, 43723, 42152, 42153,
Grommet: 92420, 92720
Pigtail: 66825, 67000, 66812, 67090
VMRS Code: 034-002-058

LED

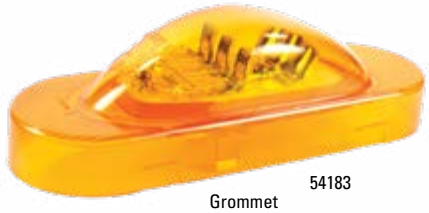

54183
Grommet Mount

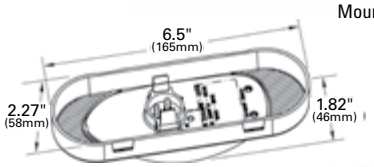

Integrated Flange
54203

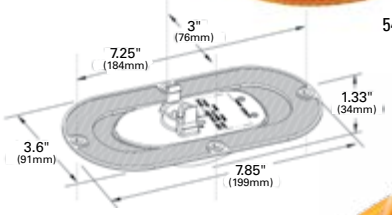

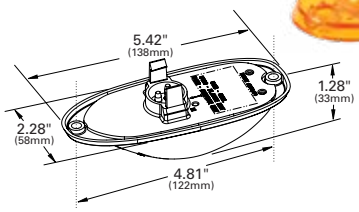

54233
Surface Mount

SUPERNOVA® OVAL LED SIDE TURN/MARKER LAMP

Flashing turn signal is visible to driver during operation • Available in recessed grommet/flange, surface, and integrated flange mount versions • Male pin and hard shell connection options • 50-state legal, meets SAE J914™ E/E2 and California Title 13

GROMMET MOUNT:

54183 Yellow, Male Pin
54193 Yellow, Hard Shell
54253 Yellow, Male Pin, w/ Black Theft-Resistant Flange
54263 Yellow, Male Pin, w/ Stainless Steel Theft-Resistant Flange
54243 Yellow, Male Pin, w/ Gray Theft-Resistant Flange

INTEGRATED FLANGE MOUNT:

54203 Yellow, Male Pin
54213 Yellow, Hard Shell

SURFACE MOUNT:

54223 Yellow, Male Pin
54233 Yellow, Hard Shell

Material: Polycarbonate
Regulations / Standards: FMVSS 108 / Optic - SAE E, E2, P2
Finish: Yellow
Volts / Amps: 13.5V / .45A / .06A
Bracket: 43362, 43952, 43220, 43223, 43222, 43100, 43723, 42152, 42153, 43172
Grommet: 92420, 92720
Pigtail: Male Pin: Male Pin: 66815, 67002, 66841, 66816, 67005, 66845
Hard Shell: 66861, 66862
VMRS Code: 034-003-097

 © 2019 All Rights Reserved, Grote® Industries, Inc.

LED HYBRID SIDE TURN/MARKER LAMP

Hybrid LED/incandescent technology provides a low cost-to-life ratio with an incandescent flashing function and an LED marker • Vent filters in housing expel water vapor when lamp is lit to prevent water pooling inside lamp • Foam gasket provides protection against moisture intrusion • Sealed Packard® style connector minimizes potential failure points associated with conventional pigtail connections • Used on Navistar® vehicles

52423 Yellow

Material: Polycarbonate
Regulations / Standards: FMVSS 108 / SAE E, E2, P2
Finish: Yellow
LED: Volts / Amps: 12V / .06A (P2)
Bulb: 3156, 32 CP; Volts / Amps: 12V / 2.1A (E, E2)
Pigtail: 66826
VMRS Code: 034-003-097

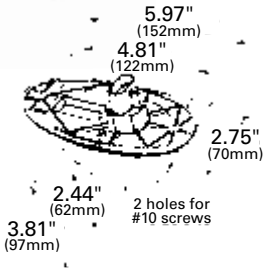

TORSION MOUNT™ III OVAL SIDE TURN/MARKER LAMP

Torsion Mount® III, Gel-Mount® bulb cradle design minimizes bulb vibration • Extended dome for added visibility from front and rear • Fits standard oval lamp grommets and brackets • Contains reflex reflector • Exceeds SAE J914™, Nov. '87

SIDE TURN/MARKER:

52533 Yellow, Male Pin
52513 Yellow, Female Pin

Material: Polycarbonate
Regulations / Standards: FMVSS 108 / SAE A, E, P2, P3
Finish: Yellow
Bulb: 1157, 32/3 CP
Volts / Amps: 12V / 2.1A (E) /.59A (P2, P3)
Bracket: 43362, 43952, 43220, 43223, 43222, 43100, 43723, 42152, 42153
Grommet: 92420, 92720
Pigtail: Male Pin: 66815, 67002, 66841, 66816, 67005, 66845
Female Pin: 66825, 67000, 66812, 66844, 66843, 66811, 67090
VMRS Code: 034-003-097

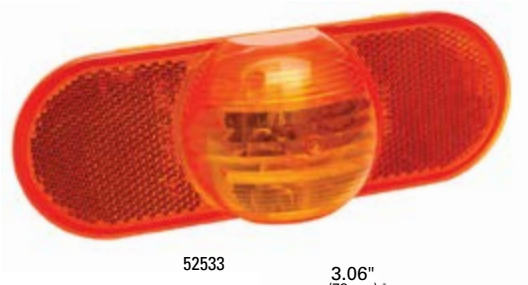

52533

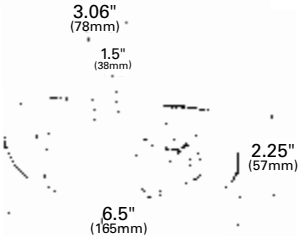

ECONOMY OVAL SIDE TURN/MARKER LAMP

Standard female pin connection

52193 Yellow

KITS:

52253 Yellow (52193 + 92420 + 67090)

Material: Polycarbonate
Regulations / Standards: FMVSS 108 / SAE A, E, P2
Finish: Yellow
Bulb: 2057, 32/2 CP
Volts / Amps: 12V / 2.1A (E) /.48A (P2)
Bracket: 43362, 43952, 43220, 43223, 43222, 43100, 43723, 42152, 42153,
Grommet: 92420, 92720
Pigtail: 66825, 67000, 66844, 66843, 66811, 67090, 67014, 67020
VMRS Code: 034-003-097

52193

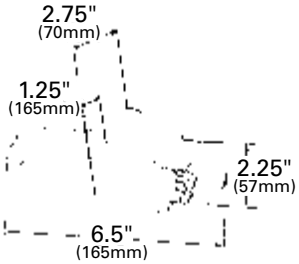

© 2019 All Rights Reserved, Grote® Industries, Inc.

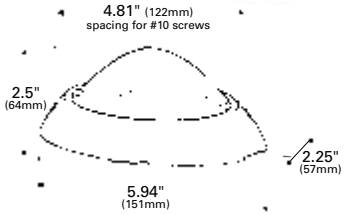

SMALL AERODYNAMIC COMBINATION MARKER/SIDE TURN LAMP

One-way check valve expels water • High-impact base, polycarbonate lens • Uses reliable 3157, wedge base bulb • Retrofits to Sentry lamp 53063 and 53163 • Great upgrade/replacement on Freightliner® mid-turn lamps • Exceeds SAE J2039™ June '94

SIDE TURN/MARKER:

52023 Yellow, Black Base
52063 Yellow, White Base

Material: Polycarbonate
Regulations / Standards: FMVSS 108 / SAE E, P2
Finish: Yellow
Bulb: 3157, 32/2 CP
Volts / Amps: 12V / 2.1A (E) /.59A (P2, P3, PC)
Pigtail: 66905, 66904, 66900
Lens: 92893
VMRS Code: 034-003-097

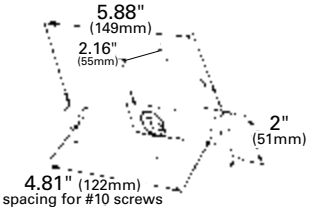

SENTRY SEALED COMBINATION MARKER/ SIDE TURN LAMP

High-impact base • Uses male pin connection; accepts UBS pigtail
• Not recommended for rear of vehicles in padded dock applications
• Yellow exceeds SAE J914™ Nov. '87

SIDE MARKER:

53062 Red, White Base

SIDE TURN/MARKER:

53063 Yellow, White Base

SIDE TURN:

53163 Yellow, Black Base

Material: Polycarbonate
Regulations / Standards: FMVSS 108 / SAE P2 (53062); SAE E2, P2 (53063); SAE E2 (53163)
Finish: Red / Yellow
Volts / Amps: Bulb 1141, 21 CP - Single Function, 53163: 12V / 1.34A (E2)
Bulb 1016, 21/6 CP - Multi-Function, 53062, 53063: 12V / 1.34A (E2) /.59A (P2)
Pigtail: 53062, 53063: 66905, 66900, 66904 53163: 66902
VMRS Code: 034-003-097

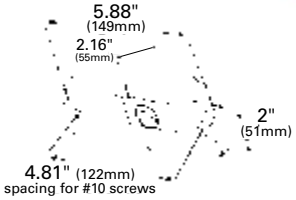

SENTRY SUPPLEMENTAL HIGH MOUNT STOP LAMP

Application for vehicles over 80" only • High-impact base • Single filament bulb • Not recommended for rear of vehicle in padded dock applications • Must be used in conjunction with a legal CHMSL

54012 Red

Material: Polycarbonate
Regulations / Standards: FMVSS 108 / SAE U
Finish: Red
Bulb: 1141, 21 CP
Volts / Amps: 12V / 1.34A
Pigtail: 66902
VMRS Code: 034-002-040

 © 2019 All Rights Reserved, Grote® Industries, Inc.

FONTAINE® REVOLUTION LED LAMP SYSTEM

LED

Unique and innovative lighting system for Fontaine® trailers
• Stop/tail/turn system utilizes one lamp that can be rotated for left-hand or right-hand installations

01-5444-75 High Mount Stop/Turn Clearance or ID Lamp
01-5445-75 S/T/T Lamp LH/RH

Material: Lens - Acrylic; Housing - ABS
Regulations / Standards: FMVSS 108 / SAE I, P2, S, T (STT), SAE P2, U (CHMSL)
Finish: Red
Volts / Amps: 01-5444-75 - 12V / .03A / .21A
01-5445-75 - 12V / .127A / .21A / .21A
VMRS Code: 034-002-040 - 01-5444-75
034-002-059 - 01-5445-75

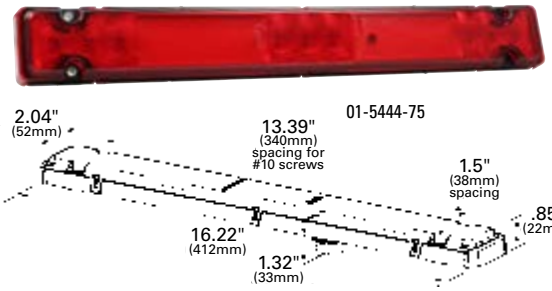

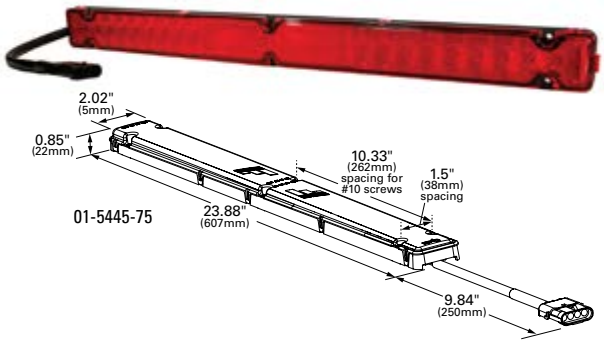

STOP/TAIL/TURN LED BAR LAMP

LED

11-LED configuration • Can be mounted in vertical, horizontal or 45° angle
• Impact-resistant housing is sealed for moisture protection • 15" length

53582 Red

Material: Polycarbonate
Regulations / Standards: FMVSS 108 / SAE I, S, T
Finish: Red
Voltage Amp: 12V / .35A (S, I) / .04A (P2, T)
VMRS Code: 034-002-059

SUPERNOVA® TURTLEBACK® II LED HIGH-MOUNT STOP/TURN AND MARKER LAMP

LED

Lamp functions as a marker, clearance, ID, and supplemental high-mount stop or turn lamp • Three-wire connection

54002 Red
54003 Yellow

Material: Polycarbonate
Regulations / Standards: FMVSS 108 / SAE P2, U
Finish: Red / Yellow
Volts / Amps: 12V / .25A (U) / .025A (P2)
Bracket: 43050
Pigtail: 66815, 67002, 66841, 66816, 67005, 66845
VMRS Code: 034-002-040

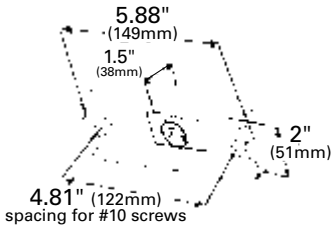

© 2019 All Rights Reserved, Grote® Industries, Inc.

LED

HI COUNT® RECTANGULAR LED STOP/TAIL/TURN LAMP

Vertical or horizontal mount • Standard female pin connection provides easy retrofits • Yellow lens meets photometric requirements for front park and turn

G4502 Red
G4503 Yellow

Material: Polycarbonate
Regulations / Standards: FMVSS 108 / SAE I, P2, S, T
Finish: Red / Yellow
Volts / Amps: Red: 12V / .50A (I, S) / .07 (P2, T)
Yellow: 12V / .52A (I) / .09A (P)
Grommet: 94180
Pigtail: 66825, 67000, 66812, 66844, 66843, 66811, 67090
VMRS Code: 034-002-059

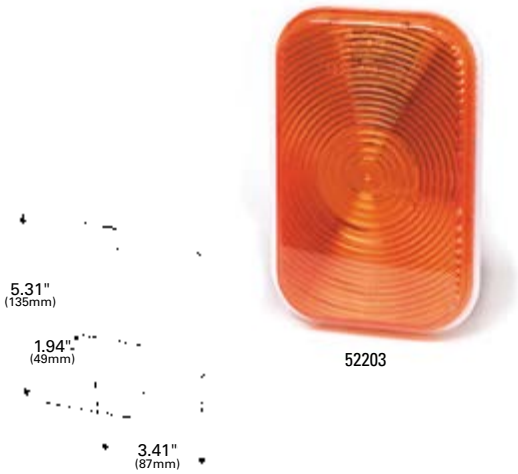

RECTANGULAR STOP/TAIL/TURN LAMP

Rubber shock-mounted bulb socket • Industry standard female pin connection

STOP/TAIL/TURN LAMP (DOUBLE CONTACT):

52202 Red

PARK/TURN LAMP (DOUBLE CONTACT):

52203 Yellow

Material: Polycarbonate
Regulations / Standards: FMVSS 108 / SAE I, P2, S, T (52202); SAE I, P (52203)
Finish: Red / Yellow
Bulb: 2057, 32/2 CP
Volts / Amps: 52202 - 12V / 2.1A (S, I) / .48A (P2, T)
52203 - 12V / 2.1A (I) / .48A (P)
Grommet: 94180
Pigtail: 66825, 67000, 66812, 66844, 66843, 66811, 67090
VMRS Code: 034-002-058

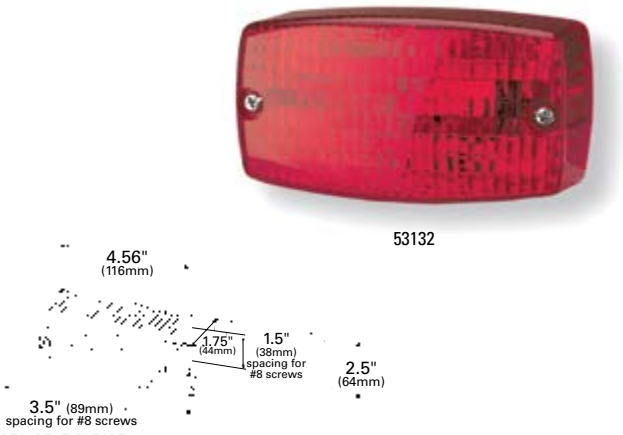

RECTANGULAR SURFACE MOUNT TURN LAMP

Double-filament bulb provides park and turn function • Less than 75 sq. cm. lens area • For use on vehicles less than 80" wide

53132 Red
53133 Yellow

Material: Steel / Polycarbonate
Regulations / Standards: FMVSS 108 / Red - SAE I, S, T; Yellow - SAE I, P
Finish: Red / Yellow
Bulb: 2057, 32/2 CP
Volts / Amps: 12V / 2.1A (I, S) / .48A (P, T)
VMRS Code: 034-002-058

 © 2019 All Rights Reserved, Grote® Industries, Inc.

SUPERNOVA® THREE-STUD METRI-PACK® LED STOP/TAIL/TURN LAMP

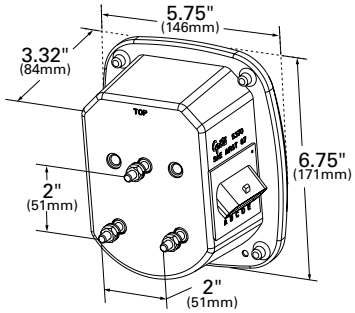

SuperNova® single-LED technology in both the S/T/T and license function • Replaces GM® 15613944 and 15565732 (53630), 15613943 and 15565731 (53640) • LED replacement for Navistar® 1661282C91 (53630) • Includes reflex reflector

53630 Red, RH
53640 Red, LH w/ License Window

Material: Polycarbonate
Regulations / Standards: FMVSS 108 / SAE A, I, L, (2)R, S, T
Finish: Red
Bulb: 1156, 32CP (R)
Volts / Amps: 12V / 2.1A (R2) / .35A (I, S) / .16A (L, T)
Bracket: 43842
Pigtail: 68680
Lens: 91302
VMRS Code: 034-002-022 - with License
034-002-013 - without License

SUPERNOVA® THREE-STUD METRI-PACK® LED STOP/TAIL/TURN LAMP WITH DOUBLE CONNECTOR

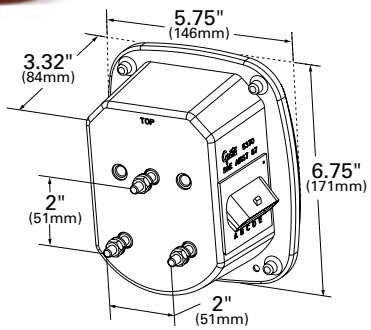

SuperNova® single-LED technology in both the S/T/T and license function • LED replacement for Navistar® 1661281C91 • Back-up function remains incandescent • Includes reflex reflector

53650 Red w/ License Window

Material: Polycarbonate
Regulations / Standards: FMVSS 108 / SAE A, I, L, (2)R, S, T
Finish: Red
Bulb: 1156, 32CP (R)
Volts / Amps: 12V / 2.1A (R2) /.35A (I, S) / .16A (L, T)
Bracket: 43842
Pigtail: 68680
Lens: 91302
VMRS Code: 034-002-022

SUPERNOVA® THREE-STUD LED STOP/TAIL/TURN LAMP

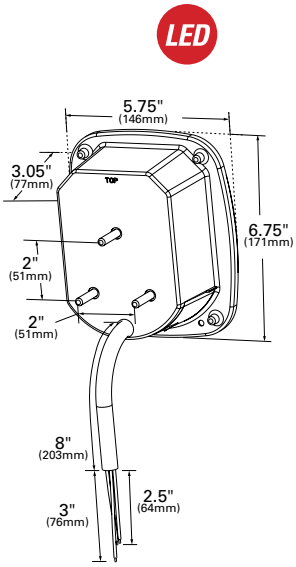

SuperNova® single-LED technology in both the S/T/T and license functions • Replaces Chevrolet®/GMC® 370867 and 370868 • Replaces Jeep® SF5457197 and SF5457198 • Replaces Peterbilt® 16-02600R and 16-02600L • Back-up function remains incandescent • Includes reflex reflector

50920 Red w/ License Window

Material: Polycarbonate
Regulations / Standards: FMVSS 108 / SAE A, I, L, (2)R, S, T
Finish: Red
Bulb: 1156, 32CP (L)
Volts / Amps: 12V / 2.1A (R2) / .35A (I, S) / .16A (L, T)
Bracket: 43842
Lens: 91302
VMRS Code: 034-002-022

© 2019 All Rights Reserved, Grote® Industries, Inc.

LED

G5202

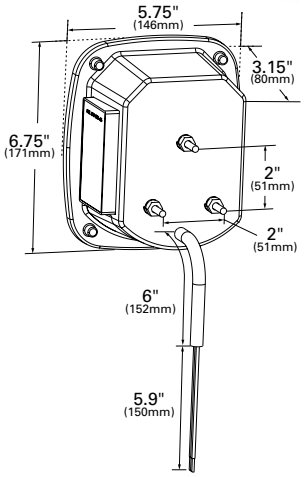

HI COUNT® LED STOP/TAIL/TURN LAMP

All functions utilize LED technology • Gasket between lens and housing protects against moisture intrusion • Side marker version directly replaces Jeep® Wrangler® lamps through 2006 • Side marker version features circuit board protection that is compatible with the existing flasher technology • 3-stud mounting design incorporates ground function • Mounting hardware and instructions included for easy installation / retrofit • Includes reflex reflector

WITH SIDEMARKER:

G5202 Red, RH w/ Side marker
G5212 Red, LH w/ License Window & Side marker

WITHOUT SIDEMARKER:

G5082 Red, RH
G5082-5 Red, RH RETAIL
G5092 Red, LH w/ License Window
G5092-5 Red, LH w/ License Window RETAIL

Material: Lens - Acrylic; Housing - Polycarbonate
Regulations / Standards: FMVSS 108 / RH - SAE A, I, (2)R, S, T; LH - SAE A, I, L, R2, S, T
Finish: Red
Volts / Amps: G5092; 12V / .21A (I, S) / .34A (R2) /.12A (L)
G5082; 12V / .21A (I, S) / .34A (R2) /.06A (T)
G5212; 12V / 1.4A (I, S) / .34A (R2) /.12A (T, L)
G5202; 12V / 1.4A (I, S) / .34A (R2) /.06A (T)
Bracket: 43842
VMRS Code: 034-002-022 - with License
034-002-013 - without License

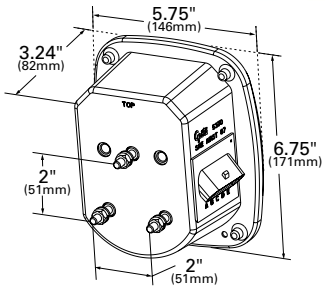

THREE-STUD METRI-PACK® STOP/TAIL/TURN LAMP

Replaces GM® 15613943 and 15565731 • Features a license window • Metri-Pack® connector on right side • Includes reflex reflector

53702 Red, RH w/ License Window
53712 Red, LH w/ License Window

Material: Lens - Acrylic and Polycarbonate; Housing - Polycarbonate
Regulations / Standards: FMVSS 108 / SAE A, I, L, R2, S, T
Finish: Red
Volts / Amps: Bulb 1156, 32 CP: 12V / 2.1A (R2)
Bulb 2057, 32/3 CP: 12V / 2.1A (I, S) /.59A (T, L)
Bracket: 43842
Pigtail: 68680
Lens: Red 91302
VMRS Code: 034-002-022

 © 2019 All Rights Reserved, Grote® Industries, Inc.

FORD® STOP/TAIL/TURN BOX LAMP

Junction box with Ford® OEM connector • Features a license window • Ford® driver side: F4HZ 13404 A • Ford® passenger side: F4HZ 13405 A • Includes reflex reflector

53782 Red, Right-Hand w/ License Window
53792 Red, Left-Hand w/ License Window

Material: Polycarbonate / Acrylic
Regulations / Standards: FMVSS 108 / SAE A, I, L, P2, (2)R, S, T
Finish: Red
Volts / Amps: Bulb 3057, 32/3 CP: 12V / 2.1A (I, S, R2) / .59A (T, L, P2)
Bracket: 43842
Pigtail: 01-6868-82
Lens: Red 91302
VMRS Code: 034-002-022

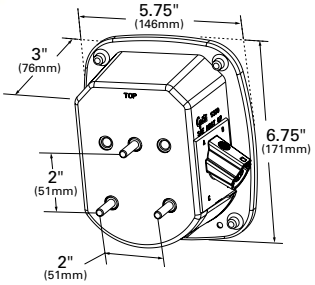

TWO-STUD METRI-PACK® STOP/TAIL/TURN LAMP WITH SINGLE CONNECTOR

Features a license window • Metri-Pack® connector on left side • Replaces Mack® 14M052M • Includes reflex reflector

53722 Red

Material: Lens - Acrylic and Polycarbonate; Housing - Polycarbonate
Regulations / Standards: FMVSS 108 / SAE A, I, L, (2)R, S, T
Finish: Red
Volts / Amps: Bulb 1156, 32 CP: 12V / 2.1A (R2)
Bulb 1157, 32/3 CP: 12V / 2.1 (I, S) /.59A (T, L)
Bracket: 43262-5, 43022, 43022-5, 43272, 43272-5, 43842
Pigtail: 68680
Lens: Red 91302
VMRS Code: 034-002-022

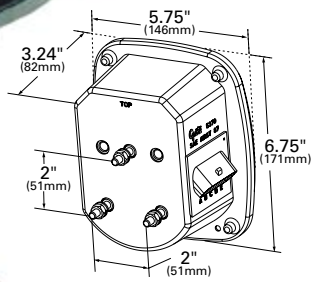

THREE-STUD METRI-PACK® STOP/TAIL/TURN LAMP WITH DOUBLE CONNECTOR

Features a license window • Metri-Pack® connectors on both sides • Replaces Navistar® 1661281C91 • Includes reflex reflector

53762 Red

Material: Lens - Acrylic and Polycarbonate; Housing - Polycarbonate
Regulations / Standards: FMVSS 108 / SAE A, I, L, (2)R, S, T
Finish: Red
Volts / Amps: Bulb 1156, 32 CP: 12V / 2.1A (R2)
Bulb 1157, 32/3 CP: 12V / 2.1A (I, S) /.59A (T, L)
Bracket: 43842
Pigtail: 68680
Lens: Red 91302
VMRS Code: 034-002-022

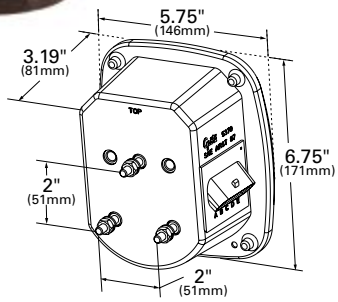

© 2019 All Rights Reserved, Grote® Industries, Inc.

TORSION MOUNT® UNIVERSAL STOP/TAIL/TURN LAMP

6-in-1 lamp • Four screw posts in junction box • Fits all 3-stud mounting on heavy duty trucks • Includes reflex reflector

52902 Red, Right-Hand w/ License Window
52912 Red, Left-Hand w/ License Window

Material: Lens - Acrylic and Polycarbonate; Housing - Polycarbonate
Regulations / Standards: FMVSS 108 / SAE A, I, L, (2)R, S, T
Finish: Red
Volts / Amps: Bulb 1156, 32 CP: 12V / 2.1A (R2)
Bulb 1157, 32/3 CP: 12V / 2.1A (I, S) / .59A (T, L)
Bracket: 43842
Lens: Red 91302
VMRS Code: 034-002-022

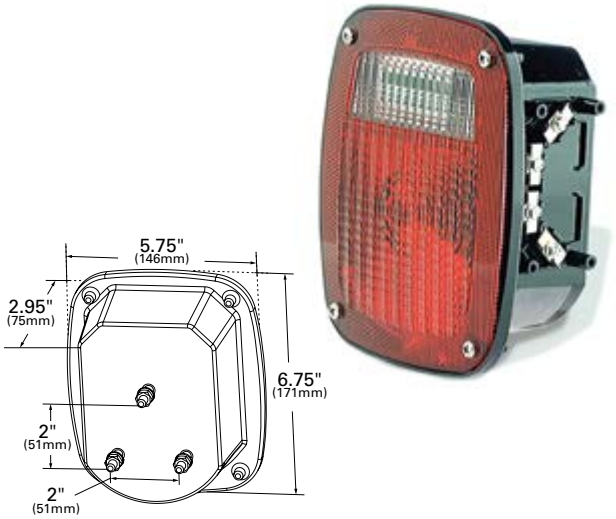

GROTE® TORSION MOUNT® THREE-STUD GMC® STOP/TAIL/TURN LAMP

Junction box with quick splice or ring connectors • Replaces GMC® 715103 or 2063933 (RH) • Replaces GMC® 715104 or 2063931 (LH) • Includes reflex reflector and wire cover

50902 Red, Right-Hand w/ License Window
50912 Red, Left-Hand w/ License Window

Material: Lens - Acrylic and Polycarbonate; Housing - Polycarbonate
Regulations / Standards: FMVSS 108 / SAE A, I, L, R2, S, T
Finish: Red
Volts / Amps: Bulb 1156, 32 CP: 12V / 2.1A (R2)
Bulb 2057, 32/2 CP: 12V / 2.1A (I, S) / .59A (T, L)
Bracket: 43842
Lens: Red 91302
VMRS Code: 034-002-022

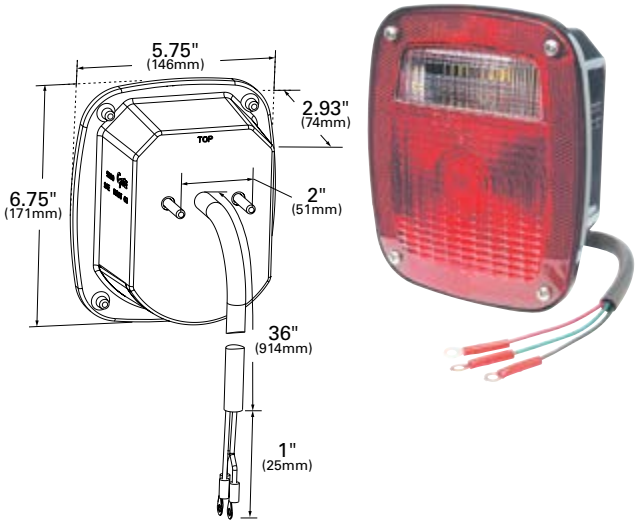

TORSION MOUNT® TWO-STUD MACK®/ DODGE® STOP/TAIL/TURN LAMP

Fits both right hand and left hand • Includes OE 39" pigtail with ring terminal • Replaces Mack® 14M0444RP1 and 14M0444RP4 shock mount • Features a license window • Includes reflex reflector

50992 Red

Material: Lens - Acrylic and Polycarbonate; Housing - Polycarbonate
Regulations / Standards: FMVSS 108 / SAE A, I, L, R2, S, T
Finish: Red
Volts / Amps: Bulb 1156, 32 CP: 12V / 2.1A (R2)
Bulb 2057, 32/3 CP: 12V / 2.1A (I, S) / .59A (T, L)
Bracket: 43262-5, 43022, 43022-5, 43272, 43272-5, 43842
Lens: Red 91302
VMRS Code: 034-002-022

 © 2019 All Rights Reserved, Grote® Industries, Inc.

THREE-STUD PETERBILT®/CHEVROLET®/JEEP®/ GMC® STOP/TAIL/TURN LAMP WITH PIGTAIL

Replaces Peterbilt® 16-02600R and 16-02600L • Replaces Chevrolet®/ GMC® 370867 and 370868 • Replaces Jeep® SF5457197 and SF5457198 • Features license window • Includes reflex reflector

50972 Red w/ License Window
50972-5 Red w/ License Window RETAIL

Material: Lens - Acrylic and Polycarbonate; Housing - Polycarbonate
Regulations / Standards: FMVSS 108 / SAE A, I, L, R2, S, T
Finish: Red
Volts / Amps: Bulb 1156, 32 CP: 12 V / 2.1A (R2)
Bulb: 1157, 32/3 CP: 12V / 2.1A (I, S) / .59A (T, L)
Bracket: 43842
Lens: Red 91302
VMRS Code: 034-002-022

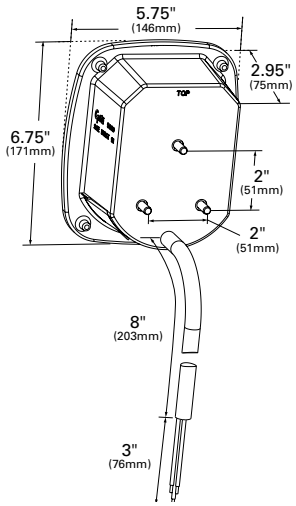

THREE-STUD, CHEVROLET®/FORD®/JEEP® STOP/TAIL/TURN LAMP WITH SIDE MARKER LAMP AND MOLDED PIGTAIL TERMINATION

Round molded terminals • Replaces Chevrolet®/GMC® 477331 and 477332 (RH) • Replaces Jeep® SF5758255 and SF5758254 (LH) • Features sidemarkers • Includes reflex reflector

WITHOUT LICENSE WINDOW:

52802 Red, RH

WITH LICENSE WINDOW:

52812 Red, LH

Material: Lens - Acrylic; Housing - Polycarbonate
Regulations / Standards: FMVSS 108 / RH - SAE A, I, P2, R2, S, T; LH - SAE A, I, L, P2, R2, S, T
Finish: Red
Volts / Amps: Bulb 1156, 32 CP: 12V / 2.1A (R2)
Bulb 1157, 32/3 CP: 12V / 2.1A (I, S) / .59A (T, L)
Bracket: 43842
Lens: Red 91302
VMRS Code: 034-002-022 - with License
034-002-013 - without License

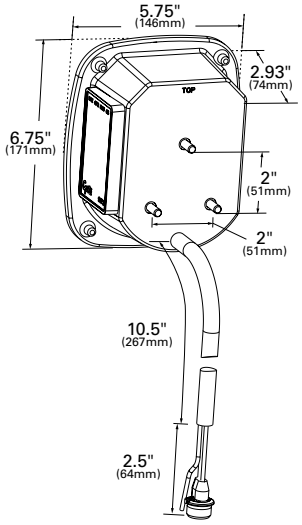

© 2019 All Rights Reserved, Grote® Industries, Inc.

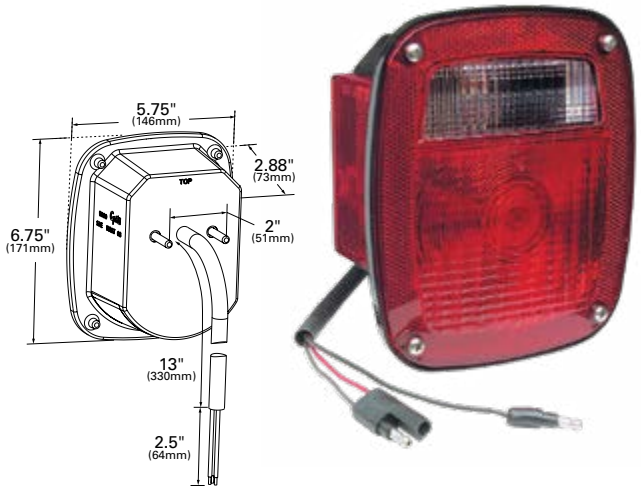

TORSION MOUNT® TWO-STUD DODGE® STOP/TAIL/TURN LAMP WITH SIDE MARKER LAMP AND MOLDED PIGTAIL TERMINATION

Replaces Dodge® 4114562 (RH) • Replaces Dodge® 4114561 and 4114563 (LH) • Includes reflex reflector

WITHOUT LICENSE WINDOW:

52822 Red, Right-Hand

WITH LICENSE WINDOW:

52832 Red, Left-Hand

Material: Lens - Acrylic; Housing - Polycarbonate
Regulations / Standards: FMVSS 108 / RH - SAE A, I, P2, R2, S, T; LH - SAE A, I, L, P2, R2, S, T
Finish: Red
Volts / Amps: Bulb 1156, 32 CP: 12 V / 2.1A (R2)
Bulb 1157, 32/3 CP: 12 V / 2.1(I, S) / .59A (T, L)
Bulb 193, 2CP: 12V / .33A(P2)
Bracket: 43262-5, 43022, 43022-5, 43272, 43272-5, 43842
Lens: Red 91302
VMRS Code: 034-002-022 - with License
034-002-013 - without License

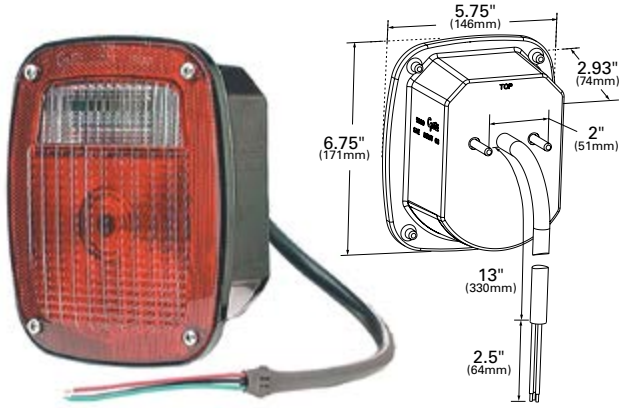

TORSION MOUNT® TWO-STUD DODGE® STOP/TAIL/TURN LAMP

Standard mount pigtail • Replaces Dodge® truck 3895020 and 3895021 • Features license window • Includes reflex reflector

52602 Red

Material: Lens - Acrylic and Polycarbonate; Housing - Polycarbonate
Regulations / Standards: FMVSS 108 / SAE A, I, L, R2, S, T
Finish: Red
Bulb: 1156, 32 CP
Volts / Amps: Bulb 1156, 32 CP: 12V / 2.1A (R2)
Bulb 1157, 32/2 CP: 12V / 2.1A (I, S)/ .59A (T, L)
Bracket: 43262-5, 43022, 43022-5, 43272, 43272-5, 43842
Lens: Red 91302
VMRS Code: 034-002-022

TWO-STUD FORD® STOP/TAIL/TURN LAMP WITH PIGTAIL AND MOLDED PLUG

Studs on 1 3/4" centers • Retrofits Ford® OEM C7TZ13404C, D0TZ13404A, D3KZ13404A, D3TZ13403B, E2TB13404A, E2TB13405A • Features license window • Includes reflex reflector

52972 Red

Material: Lens - Acrylic and Polycarbonate; Housing - Polycarbonate
Regulations / Standards: FMVSS 108 / SAE A, I, L, R2, S, T
Finish: Red
Volts / Amps: Bulb 1156, 32 CP: 12 V / 2.1A (R2)
Bulb 2057, 32/2 CP: 12V / 2.1A (I, S) / .59A (T, L)
Bracket: 43262-5, 43022, 43022-5, 43272, 43272-5, 43842
Lens: Red 91302
VMRS Code: 034-002-022

 © 2019 All Rights Reserved, Grote® Industries, Inc.

4" TWO-STUD STOP/TAIL/TURN LAMP

Snap-on lens • Rubber compression-sealed pigtail • Removable studs for school bus application

WITH LICENSE WINDOW:

50852 Red

WITHOUT LICENSE WINDOW:

50862 Red

Material: Lens - Acrylic and Polycarbonate (50832/-5); Housing - Polycarbonate
Lens - Acrylic and Polycarbonate (50862/-5)
Regulations / Standards: FMVSS 108 / SAE I, L, P2, S, T
Finish: Red
Bulb: 1157, 32/3 CP
Volts / Amps: 12V / 2.1A (I, S) / .59A (P2, T, L)
Bracket: 43262-5, 43022, 43022-5, 43272, 43272-5, 43842
Pigtail: 68150
Lens: Red 90232
VMRS Code: 034-002-058

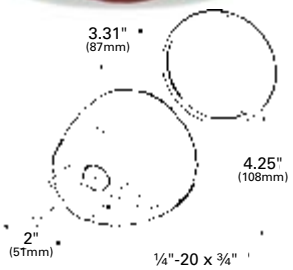

4" UNIVERSAL MOUNT STOP/TAIL/TURN LAMP

2-screw lens • Less than 75 sq. cm. of effective, projected luminous lens area • Rubber compression-sealed pigtail • Features license window • For use on vehicles less than 80" wide

WITH LICENSE WINDOW:

50872 Red

Material: Lens - Acrylic; Housing - Polypropylene
Regulations / Standards: FMVSS 108 / SAE I, L, P2, S, T
Finish: Red
Bulb: 1157, 32/3 CP
Volts / Amps: 12V / 2.1A (I, S) / .59A (L, P2, T)
Bracket: 43262-5, 43022, 43022-5, 43272, 43272-5, 43842
Pigtail: 68150
Lens: Red 91482
VMRS Code: 034-002-058

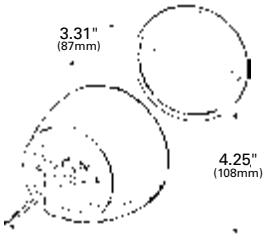

4" STEEL TWO-STUD MOUNT STOP/TAIL/TURN LAMP

Less than 75 sq. cm. of effective, projected luminous lens area
• Heavy-gauge, formed steel body • Rubber compression-sealed pigtail
• For use on vehicles less than 80" wide

WITH LICENSE WINDOW:

50882 Red

WITHOUT LICENSE WINDOW:

50892 Red

Material: Lens - Acrylic; Housing - Steel
Regulations / Standards: FMVSS 108 / SAE I, L, P2, S, T (50882);
SAE I, P2, S, T(50892)
Finish: Red
Bulb: 1157, 32/3 CP
Volts / Amps: 12V / 2.1A (I, S) / .59A (L, P2, T)
Bracket: 43262-5, 43022, 43022-5, 43272, 43272-5, 43842
Pigtail: 68150
Lens: Red 90252
VMRS Code: 034-002-058

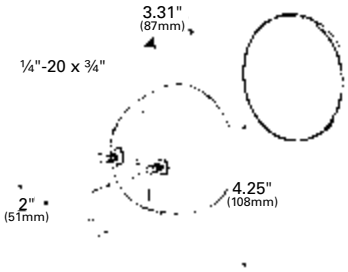

© 2019 All Rights Reserved, Grote® Industries, Inc.

LED STOP/TAIL/TURN LAMP FOR AGRICULTURE & OFF-HIGHWAY APPLICATIONS

Lamps meet the latest ASABE S279.17 specifications • Lamps may be mounted right side up, upside down, or vertically and still meet compliance specifications • Lamps employ bi-voltage circuitry – 12/24 volt

56150	Yellow and Yellow, Pedestal	MULTI
56160	Yellow and Yellow, Surface Mount	MULTI
56170	Red, Pedestal	MULTI
56180	Red, Surface Mount	MULTI

Material: Lens - High Impact Acrylic; Housing - ABS
Regulations / Standards: FMVSS 108 / SAE I6 (56150 & 56160); SAE I, S, T (56170 & 56180)
Other: IP67 Compliant
Finish: Yellow, Red
Voltage: Bi-voltage, 12 and 24 Volt
Red - 14V / .0142A (T) / .142A (S, T)
Red - 28V / .0081A (T) / .075A (S, T)
Yellow - 14V / .556A (HAZ)
Red - 28V / .0286A (HAZ)
VMRS Code: 034-002-059

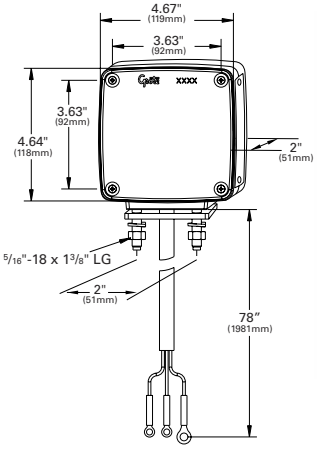

HI COUNT® DOUBLE-FACE LED STOP/TAIL/TURN LAMP WITH SIDEMARKER

2-stud mounting bolts • 25 diodes on either front or back with two diodes in the sidemarker • Attached three-wire harness • Includes reflex reflector

G5530	Red and Yellow, Left-Hand
G5540	Red and Yellow, Right-Hand
G5543-5	Yellow and Yellow, w/ Packard Connector RETAIL

Material: Lens - Acrylic; Housing - Chrome-Plated ABS
Regulations / Standards: FMVSS 108 / SAE A, I, T, P, P2 (G5530, G5540); SAE A, I, P, P2 (G5543-5)
Finish: Chrome / Red / Yellow
Volts / Amps: 12V / .775A (I) / .038A (P, P2, T)
VMRS Code: 034-002-059

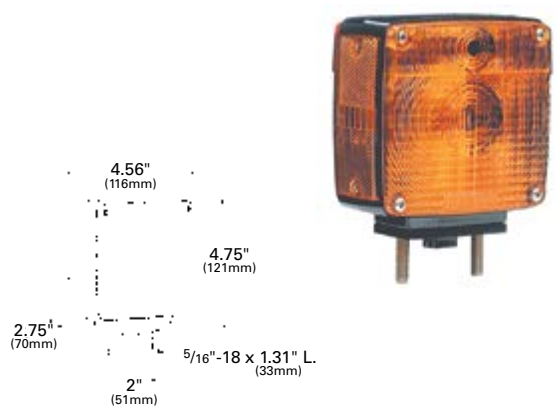

TWO-STUD PLUG-IN LAMP WITH SIDE MARKER

Incorporates side marker light • Fits right or left side • Keyed, plug-in receptacle, accepts OEM harness • Standard with Navistar®/Volvo® • Vertical mount • Includes reflex reflector

55470	Red and Yellow

Material: Lens - Acrylic; Housing - Polycarbonate
Regulations / Standards: FMVSS 108 / SAE A, I, P2
Finish: Red / Yellow
Volts / Amps: Bulb 1156, 32 CP: 12V / 2.1A (I)
Bulb 193, 2 CP: 12V / .33A (P2)
Lens: Red 91502; Yellow 91503; Sidemarker - Yellow 91513
VMRS Code: 034-003-057

 © 2019 All Rights Reserved, Grote® Industries, Inc.

TWO-STUD CHROME LAMP WITH PIGTAIL

Switch lens for right or left applications • Ground wire plus tab • PVC wire jacket material • 73" color-coded pigtail • Vertical mount • Includes reflex reflector

55340 Red and Yellow

Material: ABS / Acrylic / Polycarbonate
Regulations / Standards: FMVSS 108 / SAE A, I, P2
Finish: Red / Yellow
Volts / Amps: Bulb 1156, 32 CP: 12V / 2.1A (I)
Bulb 193, 2 CP: 12V / .33A (P2)
Lens: Red 90482, Yellow 90483
VMRS Code: 034-003-057

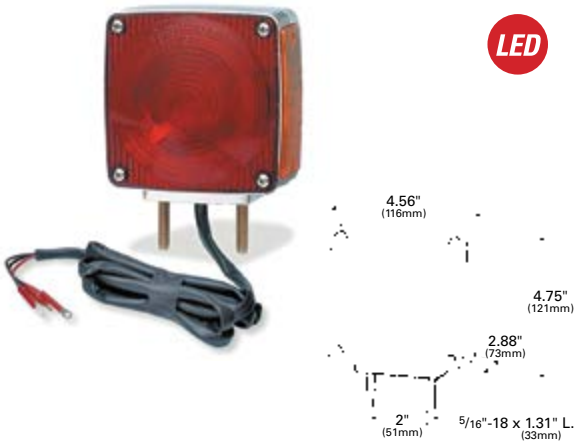

TWO-STUD LAMP WITH PIGTAIL

High-heat acrylic lens • 2" mounting centers • Incorporates sidemarker light • Replaces Chevrolet®/GMC® 2017747 (RH) and 2017751 (LH) • Includes reflex reflector

55410 Red and Yellow, Right-Hand
55420 Red and Yellow, Left-Hand

Material: Lens - Acrylic; Housing - Polycarbonate
Regulations / Standards: FMVSS 108 / SAE A, I, P, P2
Finish: Red / Yellow
Volts / Amps: Bulb 1156, 32 CP: 12V / 2.1A (I)
Bulb 193, 2 CP (X2): 12V / .66A (P, P2)
Lens: Red 91502, Yellow 91503; Sidemarker - Yellow 91513
VMRS Code: 034-003-057

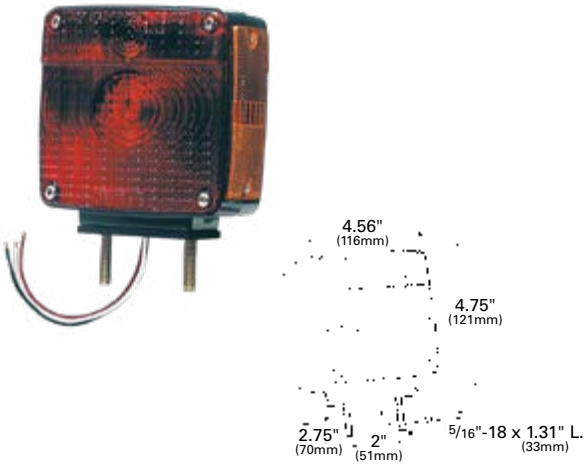

PEDESTAL-MOUNT LAMP WITH PIGTAIL

High-heat acrylic-lens • Incorporates sidemarker light • Replaces Chevrolet®/GMC® 694628 (RH) • Replaces Chevrolet®/GMC® 694627 (LH) • Includes reflex reflector

55450 Red and Yellow, Right-Hand
55460 Red and Yellow, Left-Hand

Material: Lens - Acrylic; Housing - ABS/Polycarbonate
Regulations / Standards: FMVSS 108 / SAE A, I, P, P2
Finish: Red / Yellow
Volts / Amps: Bulb 1156, 32 CP: 12V / 2.1A (I)
Bulb 193, 2 CP (X2): 12V / .66A (P, P2)
Lens: Red 91502, Yellow 91503; Sidemarker - Yellow 91513
VMRS Code: 034-003-057

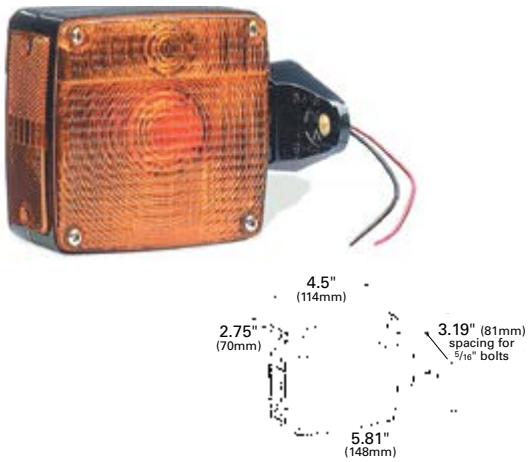

© 2019 All Rights Reserved, Grote® Industries, Inc.

LED

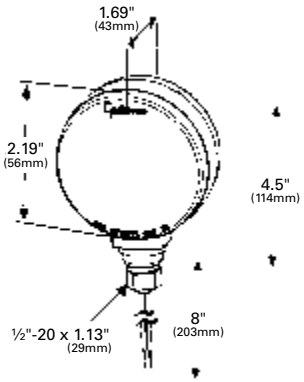

4" HI COUNT® DOUBLE-FACE LED LAMP

Attractive multiple diode design • Heavy-duty housing with hardwired connection for variable wiring options • Two-wire, double-contact installation

G5300 Red and Yellow

Material: Lens - Acrylic; Housing - Chrome-Plated Die-cast Zinc
Regulations / Standards: FMVSS 108 / SAE I, T
Finish: Chrome / Red / Yellow
Volts / Amps: 12V / .77A (I) / .038A (T)
Lens: Red 92062; Yellow 92063
VMRS Code: 034-002-013

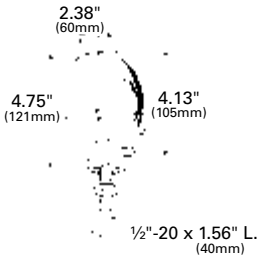

4" ZINC DIE-CAST DOUBLE-FACE LAMP

Less than 75 sq. cm. of effective, projected luminous lens area • For use on vehicles less than 80" wide

DOUBLE CONTACT:

53000 Red and Yellow, Chrome-Plated
53020 Red and Yellow, Black Enamel Finish
53023 Yellow and Yellow, Black Enamel Finish

SINGLE CONTACT:

56000 Red and Yellow, Chrome-Plated
56020 Red and Yellow, Black Enamel Finish

Material: Lens - Acrylic; Housing - Chrome-Plated Die-cast Zinc
Regulations / Standards: FMVSS 108 / SAE Double - SAE I, P; Single - SAE I
Finish: Red / Yellow
Volts / Amps: Bulb (53000, 53020, 53023) 1157, 32/3 CP: 12V / .59A (P) / 2.1A (I)
Bulb (56000, 56020) 1156, 32 CP: 12V / 2.1A (I)
Pigtail: 68130, 68170
Lens: Red 91582; Yellow 91583
VMRS Code: 034-002-013

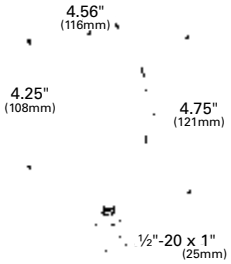

THIN-LINE ZINC DIE-CAST DOUBLE-FACE LAMP

For fender or front bracket mount • Wire exit has a grommet to protect the jacket from abrasion • Single contact

55280 Red and Yellow, Baked Aluminum Finish
55290 Red and Yellow, Chrome-Plated

Material: Lens - Polycarbonate; Housing - Die-cast Zinc
Regulations / Standards: FMVSS 108 / SAE I
Finish: Red / Yellow
Bulb: 1156, 32 CP
Volts / Amps: 12V / 2.1A
Pigtail: 68170
Lens: Red 90232, Yellow 90233
VMRS Code: 034-002-013

 © 2019 All Rights Reserved, Grote® Industries, Inc.

THIN-LINE DOUBLE-FACE LAMP

Easy snap-on lenses • Molded-in baffle • Molded-in o-ring • Wire exit has a grommet to protect jacket against abrasion

DOUBLE CONTACT:

50630 Red and Yellow

SINGLE CONTACT:

55220 Red and Yellow
55223 Yellow and Yellow

Material: Lens - Acrylic; Housing - Polycarbonate
Regulations / Standards: FMVSS 108 / Double - SAE I, P; Single - SAE I
Finish: Red / Yellow
Volts / Amps: Bulb (50630) 1157, 32/3 CP: 12V / 2.1A (I) /.59A (P)
Bulb (55220, 55223) 1156, 32 CP: 12V / 2.1A (I)
Pigtail: 68170, 68130
Lens: Red 90232, Yellow 90233
VMRS Code: 034-002-013

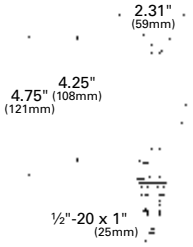

SINGLE-FACE LAMP

Easy snap-on lens • Molded-on baffle • Rubber plug-in pedestal

DOUBLE CONTACT:

50642 Red

Material: Polycarbonate
Regulations / Standards: FMVSS 108 / SAE I, S, T
Finish: Red
Bulb: 1157, 32/3 CP
Volts / Amps: 12V / 2.1A (I,S) /.59A (T)
Pigtail: 68130, 68170
Lens: 90232
VMRS Code: 034-002-013

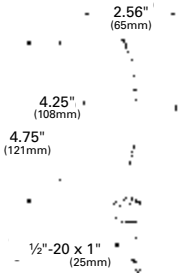

STEEL SINGLE-FACE LAMP

Snap-ring lens application • Two-wire pigtail • Long-life bulb

DOUBLE CONTACT:

50352 Red

Material: Lens - Acrylic; Housing - Steel
Regulations / Standards: FMVSS 108 / SAE I, P2, P3, S, T
Finish: Red
Bulb: 1157, 32/3 CP
Volts / Amps: 12V / 2.1A (I,S) / .59A (P2, P3, T)
Accessory: Snap Ring 99593
Pigtail: 68130
Lens: Red 90012
VMRS Code: 034-002-013

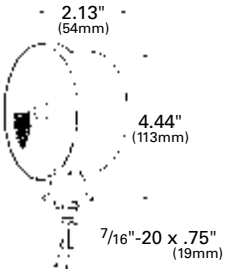

© 2019 All Rights Reserved, Grote® Industries, Inc.

LED

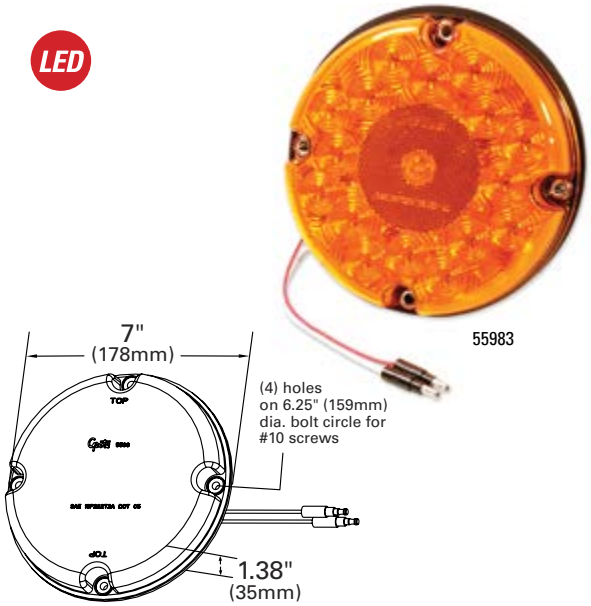

7" LED STOP/TAIL/TURN LAMP

UV-protected lens • Male .180 bullet connectors • Surface mount installation (no cut-outs required) • Install using #10 screws

STOP/TAIL/TURN LAMP

53422 Red, Stop/Tail/Turn Lamp w/ Reflex

SINGLE FUNCTION:

55982 Red, Turn Lamp w/ Reflex
55983 Yellow, Front Turn Lamp w/ Reflex
55992 Red, Turn Lamp w/o Reflex
55993 Yellow, Turn Lamp w/o Reflex

Material: Polycarbonate
Regulations / Standards: FMVSS 108 / SAE A, I, P2, S, T (53422); SAE A, I, S (55982); SAE A, I (55983); SAE I(55982/3)
Finish: Red / Yellow
Volts / Amps: S/T/T - 12V / .39A (A, I) /.03A (P2, T)
Single Function - 12V / .39A (I, S)
Bracket: 93982
VMRS Code: 034-003-071

LED

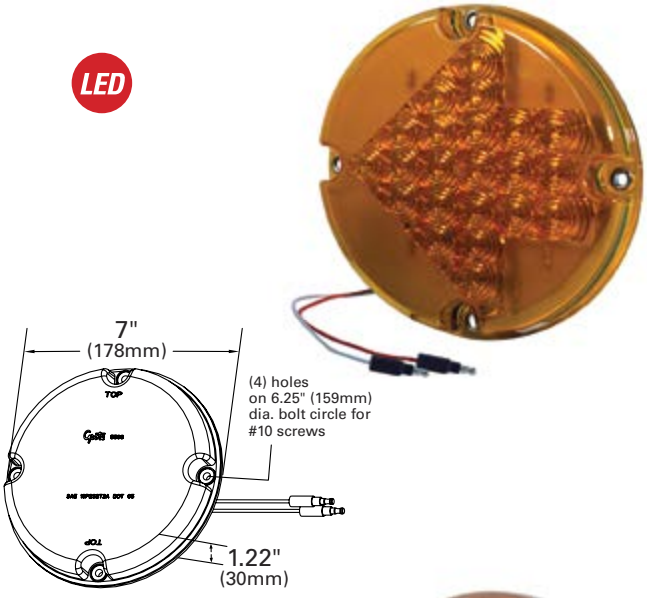

7" LED ARROW TURN LAMP

Large arrow pattern makes it easier for road traffic to identify turning vehicles • Meets FMVSS 108 Front and Rear Turn requirements • Auxiliary for midturn and/or wide turn indications • Surface mount for easy installation • UV-coated lens prevents weathering from the elements • Mounts with #10 screws

53883 Yellow, Turn Lamp

Material: Polycarbonate
Regulations / Standards: FMVSS 108 / SAE I
Finish: Yellow
Volts / Amps: 12V / .327A
Bracket: 93982
VMRS Code: 034-003-071

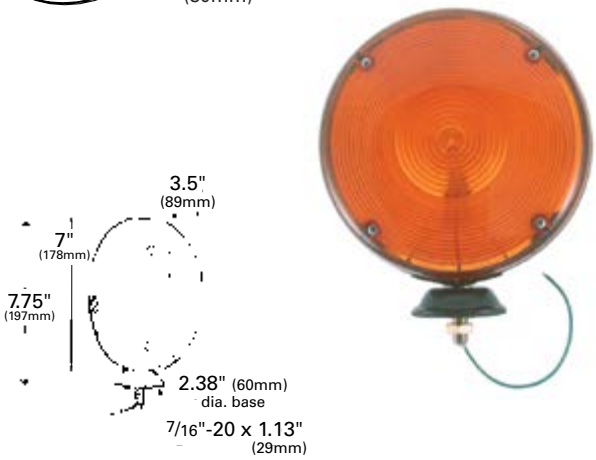

7" DOUBLE-FACE PEDESTAL LAMP

For simultaneous front and rear warning • Pedestal mounting • Baked black enamel finish

TURN:

78153 Yellow and Yellow

Material: Lens - Acrylic; Housing - Steel
Regulations / Standards: FMVSS 108 / SAE I
Finish: Yellow
Bulb: 1156, 32 CP
Volts / Amps: 12V / 2.1A (I)
Pigtail: 68080
Lens: 90093
VMRS Code: 034-002-013

 © 2019 All Rights Reserved, Grote® Industries, Inc.

7" SINGLE-FACE LAMP

Two-stud or bracket mounting • Heavy-gauge formed steel housing • Yellow arrow design for rear turn only • 78303 and 78313 not for front turn use

78003 Yellow
78303 Yellow, Arrow Lens, Molded .180 Terminal Pigtail
78313 Yellow, Arrow Lens, Blunt Cut Pigtail

Material: Lens - Acrylic; Housing - Steel
Regulations / Standards: FMVSS 108 / SAE I
Finish: Yellow / Black
Bulb: 1156, 32 CP
Volts / Amps: 12V / 2.1A
Bracket: 43282, 93982
Pigtail: 68080
Lens: Yellow 90093; Arrow Lens - Yellow 90103
VMRS Code: 034-003-071

78003

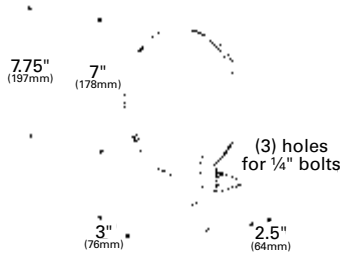

7" SCHOOL BUS LAMPS

Rugged housing • Acrylic lens • Flush mount • Blunt cut wires

SINGLE CONTACT:

56072 Red
56073 Yellow
56083 Yellow w/ Arrow Lens

DOUBLE CONTACT:

50132 Red

Material: Lens - Acrylic; Housing - Steel
Regulations / Standards: FMVSS 108 / SAE I, S, T (56072, 50132)
FMVSS: I (56073, 56083)
Finish: Red / Yellow / Black
Volts / Amps: Bulb 1157, 32/3 CP (x2) (50132): 12V / 2.1A (I, S) / .59A (T) Double Contact
Bulb 1156, 32 CP (56072, 56073, 56083): 12V / 2.1A (I, S) Single Contact
Lens: Red 99842, Yellow 99843
VMRS Code: 034-003-071

56072

56083

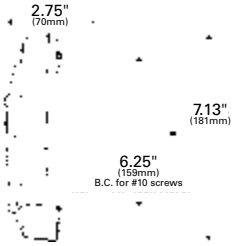

© 2019 All Rights Reserved, Grote® Industries, Inc.

PIGTAILS FOR 4" ROUND & 6" OVAL STOP/TAIL/TURN

For more information on pigtail products see **Pigtails** section: page 254

STOP/TAIL/TURN THREE-WIRE PLUG-IN PIGTAILS FOR MALE PIN LAMPS

66815	6" Long, Ground Return, Slim-Line .180 Male
66841	8" Long, Chassis Ground, Slim-Line .180 Male
67002	11" Long, Chassis Ground, Blunt Cut Wire

STOP/TAIL/TURN THREE-WIRE 90° PLUG-IN PIGTAILS FOR MALE PIN LAMPS

66816	6" Long, Ground Return System, 90° Plug, Slim-Line .180 Male
66845	8" Long, Chassis Ground, 90° Plug, Slim-Line .180 Male
67005	11" Long, Chassis Ground, 90° Plug, Blunt Cut Wires

SINGLE FUNCTION TWO-WIRE PLUG-IN PIGTAILS FOR MALE PIN LAMPS

67013	11" Long, Chassis Ground, Blunt Clut Wire
66842	10" Long, Chassis Ground, Slim-Line .180 Male

SINGLE FUNCTION TWO-WIRE 90° PLUG-IN PIGTAILS FOR MALE PIN LAMPS

66846	10" Long, Chassis Ground, 90° Plug, Slim-Line .180 Male
67016	11" Long, Chassis Ground, 90° Plug, Blunt Cut Wires

STOP/TAIL/TURN THREE-WIRE PLUG-IN PIGTAILS FOR FEMALE PIN LAMPS

66812	6" Long, Chassis Ground, Slim-Line .180 Male
66825	8" Long, Ground Return, Slim-Line .180 Male
67000	11 1/2" Long, Chassis Ground, Blunt Cut Wires

STOP/TAIL/TURN THREE-WIRE 90° PLUG-IN PIGTAILS FOR FEMALE PIN LAMPS

66811	18" Long, Chassis Ground, Slim-Line .180 Male, Star Ring Terminal
66843	18" Long, Chassis Ground, Blunt Cut Wires, Star Ring Terminal
66844	18" Long, Ground Return, Slim-Line .180 Male

UNIVERSAL 3-WIRE 90° PLUG-IN PIGTAIL FOR FEMALE-PIN LAMPS

67090	13" Long, Chassis Ground, 90° Plug, Blunt Cut Wires
67090-5	13" Long, Chassis Ground, 90° Plug, Blunt Cut Wires RETAIL

ADAPTER PLUGS

66830	6" Long, Female Pin to Male Pin Lamp Termination
66831	6" Long, Male Pin to Female Pin Lamp Termination
66836	6" Long, Female Pin to 90° Male Pin Lamp Termination

 © 2019 All Rights Reserved, Grote® Industries, Inc.

PIGTAILS FOR 4" ROUND & 6" OVAL STOP/TAIL/TURN

For more information on pigtail products see **Pigtails** section: page 254

TWO-WIRE PLUG-IN PIGTAILS FOR FEMALE-PIN LAMPS

STRAIGHT:

67010 11 1/2" Long, Chassis Ground, Blunt Cut
67011 10 1/4" Long, Chassis Ground, Standard .180 Male

90° PLUG:

67014 10" Long, Chassis Ground, Blunt Cut
67020 10" Long, Ground Return, Slim-Line .180 Male

HARD-SHELL CONNECTOR PIGTAILS

DUAL FUNCTION:

66861 11" Long, Chassis Ground, Blunt Cut Wires

SINGLE FUNCTION:

66862 11" Long, Chassis Ground, Blunt Cut Wires

TWO LAMP 9" Y ADAPTER PIGTAILS

90° PLUG:

66814 9" Long, Adapter, Female-to-Male Pin

STRAIGHT:

66810 9" Long, Adapter, Female-to-Female Pin
66813 9" Long, Adapter, Male-to-Male Pin

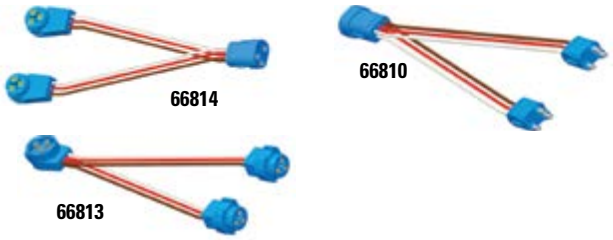

MIDTURN ADAPTER PIGTAILS

66820 Adapter, Female-to-Female Pin, (2) Additional Standard .180 Receptacles
66823 Adapter, Male-to-Male Pin, (2) Additional Standard .180 Receptacles

ADAPTER PLUGS FOR HARD SHELL CONNECTORS

COMPETITIVE HARNESS TO MALE PIN:

67006 6" Long, Hard Shell to Male Pin Connector

FEMALE PIN HARNESS TO AMP CONNECTOR:

66860 6" Long, Female Pin to Hard Shell Connector

COMBO PIGTAILS (4" ONLY)

4" WITH INTEGRATED BACK-UP

66863 Converter for Male Pin Lamps (10" Long)
66864 Converter for Female Pin Lamps (10" Long)
66865 Converter for Hard Shell Lamps (10" Long)
01-6686-E3 Ring Terminals to Lamp Termination

4" W/O INTEGRATED BACK-UP

66442 Converter for Male Pin Lamps, 10"
66443 Converter for Female Pin Lamps, 10"
66444 Converter for Hard Shell Lamps, 10"

© 2019 All Rights Reserved, Grote® Industries, Inc.

4" MOUNTING OPTIONS

For more information on mounting products see **Mounting Options** section: page 264

SNAP-IN COVER PLATES

94380-4	4" Round Gray, Pair Pack
94382-4	4" Round Black, Pair Pack

Material: Polycarbonate

RECESSED MOUNTING GROMMET FOR 4" ROUND LAMPS

91740	Grommet

Material: PVC
Finish: Black

CLOSED-BACK RECESSED MOUNTING GROMMET FOR 4" ROUND LAMPS

91950	Grommet

Material: PVC
Finish: Black

STAINLESS STEEL SNAP-IN THEFT-RESISTANT MOUNTING FLANGE FOR 4" ROUND LED LAMPS

93683	Stainless Steel

Material: Stainless Steel
Finish: Stainless Steel

SNAP-IN THEFT-RESISTANT MOUNTING FLANGE FOR 4" ROUND LED LAMPS

93552	Black
93553	Chrome-Plated

Material: ABS
Finish: Black/Chrome

THEFT-RESISTANT MOUNTING FLANGE FOR 4" ROUND LAMPS

92510	White, Polycarbonate
92512	Black, Polycarbonate
92513	Chrome-Plated, ABS
92511	Gray, Polycarbonate
43253	Stainless Steel

SECURITY RING

43343	Stainless Steel Security Ring (must be used with flange)

Material: Polycarbonate; Stainless Steel; ABS

ANGLED MOUNTING BRACKET FOR 4" ROUND LAMPS

43572	Black, 90° angle bracket

Material: Steel
Finish: Black Powder-Coated
Grommet: 91740

MOUNTING MODULE FOR 4" ROUND LAMPS

43655	Yellow Zinc
51090	Gray

Material: Steel
Finish: Yellow Zinc/Gray Powder-Coated

2-LAMP MOUNTING MODULE FOR 4" ROUND LAMPS

43642	Black, Powder-Coated

Material: Steel
Finish: Black

MOUNTING MODULE FOR 4" ROUND LAMPS

43732	Black

Material: Steel
Finish: Black

SNAP RING

99593	Use with 50222 and 50352
99595	Use with 50232

Material: Stainless Steel
Finish: Stainless Steel

 © 2019 All Rights Reserved, Grote® Industries, Inc.

6" MOUNTING OPTIONS

For more information on mounting products see **Mounting Options** section: page 264

SNAP-IN COVER PLATES

94390-4	6" Oval Gray, Pair Pack
94392-4	6" Oval Black, Pair Pack

Material: Polycarbonate

RECESSED MOUNTING GROMMET FOR 6" OVAL LAMPS

92420	Open Grommet
92720	Closed Back Grommet

Material: PVC
Finish: Black

SURFACE MOUNT SNAP-IN BRACKET FOR 6" OVAL LAMPS

42152	Black, Polycarbonate
42153	Chrome, ABS

Material: Polycarbonate/ABS
Finish: Black/Chrome

SURFACE MOUNT BRACKET FOR 6" OVAL LAMPS

43172	Black

Material: Polycarbonate
Finish: Black

THEFT-RESISTANT MOUNTING FLANGE FOR 6" OVAL LAMPS

43220	Gray, Polycarbonate
43222	Black, Polycarbonate
43223	Chrome-Plated, ABS
43723	Stainless Steel

Material: Polycarbonate/Stainless Steel/ABS
Finish: Gray/Black/Stainless Steel/Chrome

ANGLED MOUNTING BRACKET FOR 6" OVAL LAMPS

43362	Black, 90° angle bracket

Material: Steel
Finish: Black
Grommet: 92420

"Z" MOUNTING BRACKET FOR 6" OVAL LAMPS

43952	Black

Material: Steel
Finish: Black
Grommet: 92420

© 2019 All Rights Reserved, Grote® Industries, Inc.

REPLACEMENT LENSES

LENS MODEL NUMBER	FITS LAMP
90012	50222
	50232
	50352
	50502
	52522
	55132
	55202
90013	50222
	50232
	50352
	50502
	52522
	55132
	55202
90103	78003
90232	50630
	50852
	50862
	55220
	55232
	55280
	55290
90233	50630
	55220
	55280
	55290
90252	50852
	50862
	50882
	50892
90482	55340
90483	55340
	64241
	64251
	64261-4
	64271
	64281
	64291-4
90762	52522

LENS MODEL NUMBER	FITS LAMP
91302	50902
	50912
	50942
	50952
	50972
	50992
	52602
	52802
	52812
	52832
	52902
	52912
	52972
	53702
	53712
	53722
	53762
91482	50852
	50862
	50872
91502	55410
	55420
	55450
	55460
	55470
91503	55410
	55420
	55450
	55460
	55470
91513	55340
	55410
	55420
	55450
	55460
	55470
91582	53000
	53020
	53052
	56000
	56020
91583	53000
	53020
	53023
	56000
	56020
92062	G5300
92063	G5300
99842	56072
	50132
99843	56073

90012, 90013

90103

90232, 90233

90252

90482, 90483

90762

91302

91482

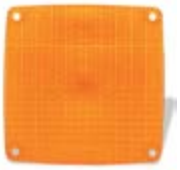
91502, 91503

91513

91582, 91583

92062, 92063

99842, 99843

Freightliner® is a registered trademark of Daimler Trucks North America, LLC; Navistar® is a registered trademark of Navistar International Corporation; Fontaine® is a registered trademark of Fontaine Truck Equipment Company; GM® is a registered trademark of General Motors LLC; Jeep® is a registered trademark of FCS US LLC; Peterbilt® is a registered trademark of PACCAR Inc DBA Peterbilt Motors Company; Chevrolet® is a registered trademark of General Motors LLC; Wrangler® is a registered trademark of FCS US LLC; GMC® is a registered trademark of General Motors LLC; Dodge® is a registered trademark of FCA US LLC.; Packard® is a registered trademark of DELPHI TECHNOLOGIES, INC.; Ford® is a registered trademark of Ford Motor Company CORPORATION DELAWARE; Metri-Pack® is a registered trademark of Aptiv Technologies Limited COMPANY BARBADOS; Mack®; Volvo®

All product and company names are trademarks™ or registered® trademarks of their respective holders. Use of them does not imply any affiliation with or endorsement by them.

 © 2019 All Rights Reserved, Grote® Industries, Inc.

SIGN-UP FOR GROTE'S ENHANCED G24/7 VISIT ORDERS.GROTE.COM

Grote® Industries is pleased to announce the launch of the enhanced G24/7 system. This complimentary service is an innovative way to place orders, track order status and view all your Grote® product activity. From the convenience of your computer or mobile device, you can now access previously unavailable information that will help you more successfully manage your business and inventory.

ORDERS.GROTE.COM

NEW FEATURES

- ***PAY ANY INVOICE ONLINE ANY TIME***
- ***EASY CREDIT CARD PROCESSING***
- ***NOW MOBILE FRIENDLY***
- ***REPRINT PACKING LISTS AND INVOICES***

UPLOAD FROM MICROSOFT® EXCEL
Customers can also upload items from Microsoft® Excel to create orders.

REFER AND REORDER USING "MY LIST"
The user can create a list of products for future reference or to reorder.

E-MAIL NOTIFICATION
When a new order is created and when an order is shipped, unlimited recipients can receive an instant e-mail notification.

ORDER ENTRY ONLINE BY CUSTOMER PART NUMBER

USING G24/7, YOU CAN QUICKLY AND EASILY:

- Track the status of current orders
- Check the status of backorders
- Check for substitutions or replacements for obsolete parts
- Check Grote® inventory availability
- Confirm ship dates
- Link to shipping carrier
- View invoice information
- Track credits
- View weight & packaging information
- View previously placed orders
- View product technical information
- Reprint packing lists and invoices

© 2019 All Rights Reserved, Grote® Industries, Inc.

03

LIGHT DUTY TRAILER LIGHTING

ÉCLAIRAGE POUR REMORQUE LÉGÈRE

ILUMINACIÓN PARA REMOLQUE, PARA TRABAJO LIVIANO

 © 2019 All Rights Reserved, Grote® Industries, Inc.

SUBMERSIBLE LED TRAILER LIGHTING KIT

7-function tail lamps: stop/tail/turn, side/rear reflector clearance/marker and license lamp • Kit includes lamps, 4' vehicle and 25' trailer harness, license bracket, and mounting hardware

65880-5 w/o Clearance/Marker RETAIL

REPLACEMENT LAMP:

51962 Red, RH, S/T/T
51962-5 Red, RH, S/T/T RETAIL
51972 Red, LH, S/T/T w/ License Window
51972-5 Red, LH, S/T/T w/ License Window RETAIL

Material: Polypropylene/Acrylic/ABS
Regulations / Standards: FMVSS 108 / RH - SAE A, I, P2, S, T; LH - SAE A, I, L, P2, S, T; C/M - SAE P2
Finish: Red/Yellow
Volts / Amps: S/T/T - 12V / .22A (per lamp); C/M - 12V / .11A (per lamp)
Bracket: 43262-5
Harness: 68420 (trailer)
68540-5 (complete)
VMRS Code: 034-002-059 - 65880-5, 51962, 51962-5, 51972, 51972-5

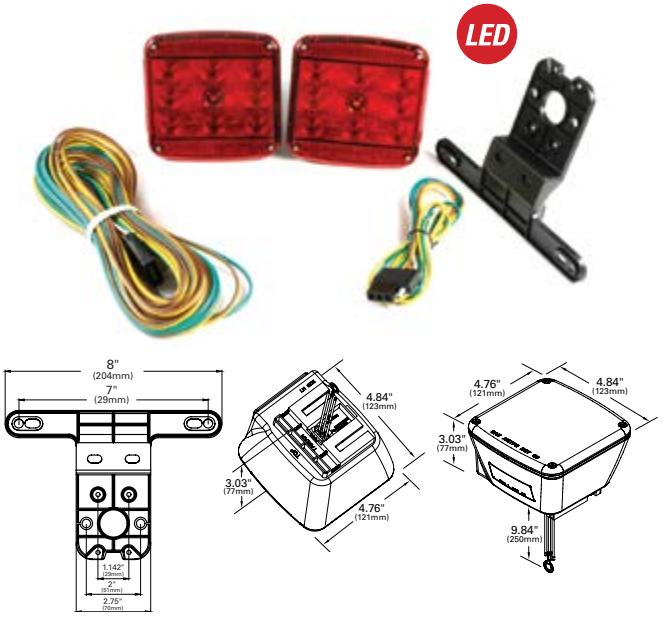

SUBMERSIBLE LED TRAILER LIGHTING KIT

Popular square design • 7-function kit • Kit includes lamps, trailer harness, license bracket and mounting hardware • Retail kit includes "try me" feature

65330-5 w/ Clearance/Marker RETAIL
65320-5 w/o Clearance/Marker RETAIL

REPLACEMENT LAMP:

51982 Red, RH, S/T/T
51982-5 Red, RH, S/T/T RETAIL
51992 Red, LH, S/T/T
51992-5 Red, LH, S/T/T RETAIL
47853-5 Yellow, C/M RETAIL

Material: Polypropylene/Acrylic/ABS
Regulations / Standards: FMVSS 108 / RH - SAE A, I, P2, S, T; LH - SAE A, I, L, P2, S, T; C/M - SAE P2
Finish: Red/Yellow
Volts / Amps: S/T/T - 12V / .22A (per lamp); C/M - 12V / .11A (per lamp)
Bracket: 43262-5
VMRS Code: 034-002-013 - 65330-5, 65320-5
034-002-022 - 51982, 51982-5, 51992, 51992-5
034-004-021 - 47853-5

© 2019 All Rights Reserved, Grote® Industries, Inc.

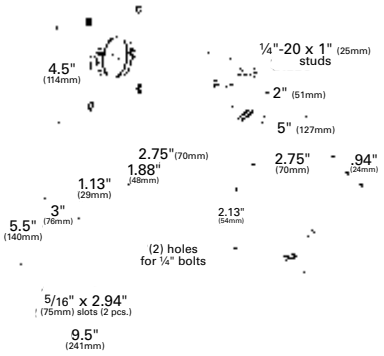

SUBMERSIBLE TRAILER LIGHTING KIT

7-function tail lamps: stop/tail/turn, clearance/marker, license, and reflector
- Kit includes 25' harness, lamps, license bracket and mounting hardware

65230-5 w/ Clearance/Marker RETAIL

REPLACEMENT PARTS:

53662 Red, RH, S/T/T
53672 Red, LH, S/T/T
46982-5 Red, C/M RETAIL
46983-5 Yellow, C/M RETAIL

Material: Acrylic / ABS / Polypropylene
Regulations / Standards: FMVSS 108 / RH - SAE A, I, P2. S. T;
LH - SAE A, I, L, P2, S, T; C/M - SAE P2
Finish: Red / Yellow
Bulb: STT - 1157; Volts / Amps: 12V / 2.1A (I, S) /.59A (T) / .27A (P2) per lamp
Bulb: C/M - 1895, 2 CP; Volts / Amps: 12V / .27A (P2) per lamp
Lens: S/T/T - Red 92792
Sidemarker and Clearance/Marker Red 91112, Yellow 91113
VMRS Code: 034-002-013 - 65230-5
034-002-022 - 53662, 53672
034-004-021 - 46982-5, 46983-5

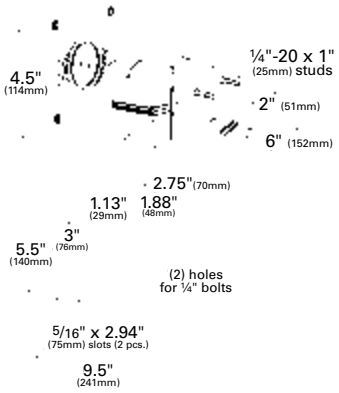

SUBMERSIBLE TRAILER LIGHTING KIT FOR TRAILERS OVER 80" WIDE

7-function tail lamps: stop/tail/turn, clearance/marker, license, and reflector
- Kit includes 25' harness, lamps, license bracket and mounting hardware

65440-5 Trialer Kit RETAIL

Material: Acrylic / ABS / Polypropylene
Regulations / Standards: FMVSS 108 / S/T/T RH- SAE A, I, P2, P3, S, T;
S/T/T LH - SAE A, I, P2, P3, L, S, T
Finish: Red
Bulb: 1157, 168 CP; Volts / Amps: 12V / .59A
Accessory: Harness: 68420
Bracket: 43262-5
Lens: S/T/T- Red 92792; C/M- Red 91122
VMRS Code: 034-002-013 - 65440-5

 © 2019 All Rights Reserved, Grote® Industries, Inc.

TRAILER LIGHTING KIT (NON-SUBMERSIBLE)

Twist-in bulb design makes it easy to replace • Kit includes lamps, 25' harness, license plate bracket, and complete wiring and installation kit

65370-5	w/ Clearance/Marker	RETAIL
65380-5	w/o Clearance/Marker	RETAIL

REPLACEMENT PARTS:

52302	Red, RH, S/T/T	
52302-5	Red, RH, S/T/T	RETAIL
52312	Red, LH, S/T/T	
52312-5	Red, LH, S/T/T	RETAIL
46983-5	Yellow, Clearance/Marker	RETAIL
52442	Red, RH, S/T/T and C/M, Over 80"	
52452	Red, LH, S/T/T w/ License Window and C/M, Over 80"	

Material: Acrylic, ABS, Polypropylene
Regulations / Standards: FMVSS 108 / SAE A, I, L, P2, S, T
SAE A, I, P2, P3, S, T (52442)
SAE A, I, L, P2, P3, S, T (52452)
Finish: Red/Yellow
Bulb: S/T/T - 1157, 32/3 CP; Volts / Amps: 12V / 2.1A (I, S) / .59 (T)
Bulb: Marker - 1895, 2 CP; Volts / Amps: 12V / .27A (P2)
Lens: S/T/T - Red 92792; Clearance/Marker; Red 91112; Yellow 91113
VMRS Code: 034-002-022 - 65380-5, 52302, 52302-5, 52313, 52312-5, 65370-5
034-004-021 - 46983-5

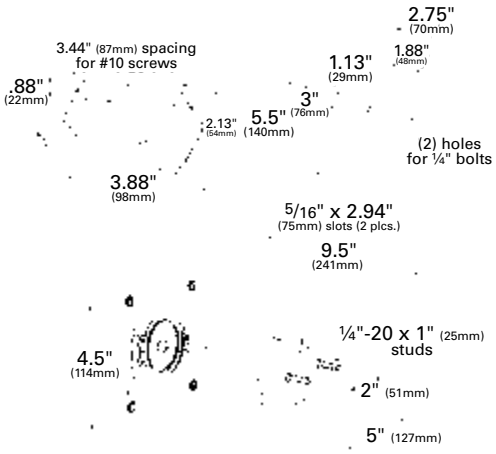

52452 52442

© 2019 All Rights Reserved, Grote® Industries, Inc.

LED

SUPERNOVA® LED OVAL TRAILER STOP/TAIL/TURN SUBMERSIBLE LIGHTING KIT

Kit includes two each of: LED lamps (54132), brackets (43362), grommets (92420) and 3-wire, 11" plug-in pigtails (67002) • Fits current mounting flanges and grommets

65390-5 Red RETAIL

Material: ABS / Acrylic / Steel / PVC
Regulations / Standards: FMVSS 108 / SAE I, S, T
Finish: Red
Volts / Amps: 12V / .48A (I, S) / .06A (P2, T) per lamp
Accessory: Lamp: Red 54132
Bracket: 43362
Grommet: 92420
Pigtail: 67002
VMRS Code: 034-002-013

OVAL TRAILER STOP/TAIL/TURN SUBMERSIBLE LIGHTING KIT

Kit includes two of each: lamps (52182), brackets (43362), grommets (92420) and 3-wire 11" plug-in pigtails (67000)

BOAT TRAILER KIT:

53082-5 RETAIL

Material: Steel / Polycarbonate / PVC
Regulations / Standards: FMVSS 108 / SAE I, S, T
Finish: Red
Bulb: 1157, 32/3 CP
Volts / Amps: 12V / 2.1A (I, S) / .59A (T) per lamp
Accessory: Lamp: Red 52182
Bracket: 43362
Grommet: 92420
Pigtail: 67000
VMRS Code: 034-002-013

 © 2019 All Rights Reserved, Grote® Industries, Inc.

SUBMERSIBLE LOW-PROFILE TRAILER LIGHTING KIT

Unique compact size fits where space is limited • Lens is sonically sealed to make a fully submersible lamp • 5-function tail lamps: stop/tail/turn, license, and reflector • Kit includes: Lamps, 4' trunk and 25' trailer harness, license bracket, and mounting hardware

65300-5 Red RETAIL

REPLACEMENT PARTS:

52492 Red, LH, S/T/T w/ License Window
52482 Red, RH, S/T/T
90652 Lens Kit (2 S/T/T and 2 C/M)

Material: ABS/Acrylic
Regulations / Standards: FMVSS 108 / RH - SAE A, I, S, T; LH - SAE A, I, L, S, T
Finish: Red
Volts / Amps: 12V / 2.1A, .48A
Bracket: 01-9321-20
VMRS Code: 034-002-013 - 65300-5, 52492, 52482
034-002-014 - 90652

LARGE WRAP-AROUND 5-FUNCTION REAR LAMP

For utility and snowmobile trailers • 5-function lamp: stop/tail/turn, clearance marker and reflector

52372 Right-Hand
52362 Left-Hand

Material: Polypropylene/Acrylic
Regulations / Standards: FMVSS 108 / SAE A, I, P2, S, T
Finish: Red
Bulb: 1157, 32/3 CP; Volts / Amps: 12V / .59A (T) /.27A (P2)
Bulb: 1895, 2 CP; Volts / Amps: 12V / 2.1A (I, S)
Lens: Kit - Red 92382
VMRS Code: 034-002-022

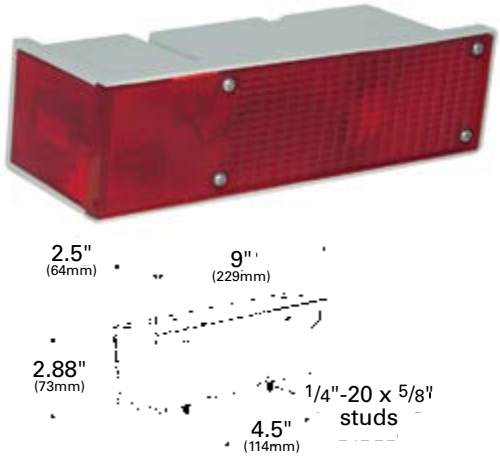

HEAVY DUTY SUPERNOVA® LED MAGNETIC TOWING KIT

Durable rubber housings • Strong 50 lb.-pull mounting magnets for each lamp • Rubber adhesive magnet covers prevent scratching paint of towed vehicle • Adjustable lamp mounting for maximum visibility and safety • Die-cast 4-pole round plug • 30 ft. abrasion-resistant jacketed cable

65432-4 Red

Material: Rubber/ABS/Acrylic
Regulations / Standards: FMVSS 108 / SAE I, P2, S, T
Finish: Red
Volts / Amps: 12V / .24A (I, S) / .03A (P2, T) per lamp
Accessory: Lamp: Red 53252; Magnetic Mount: 43300; Plug: 82-1021; Vehicle Socket: 82-1020
VMRS Code: 034-002-022

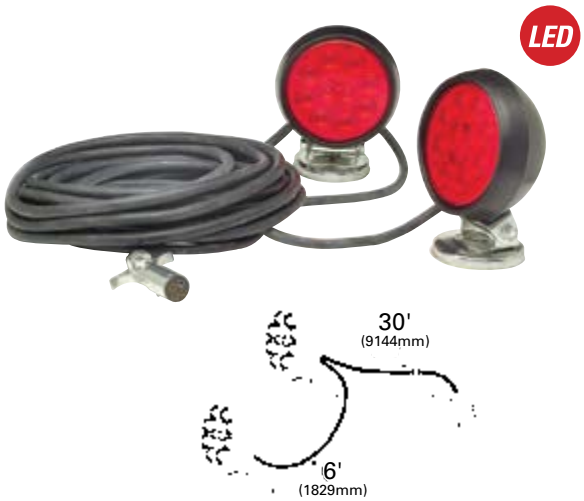

© 2019 All Rights Reserved, Grote® Industries, Inc.

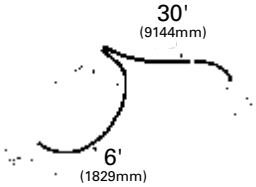

HEAVY DUTY MAGNETIC TOWING KIT

Durable rubber lamp housings • Strong 40 lb. mounting magnets for each lamp • Rubber adhesive magnet covers to prevent scratching of towed vehicle • Adjustable lamp mounting for maximum visibility and safety • Durable die-cast 4-pole plug • 30 ft. abrasion resistant double jacketed cable

65402-4 Red

Material: Rubber/Polycarbonate
Regulations / Standards: FMVSS 108 / SAE I, P2, S, T
Finish: Red/Black
Bulb: (2) #2057, 32/2 C.P.; Volts / Amps: 12 V / .48A (P2, T) / 2.1A (I, S) per lamp
Accessory: Lamp: Red 52922; Magnetic Mount: 43300; Plug: 82-1021; Vehicle Socket: 82-1020
VMRS Code: 034-002-022

LED

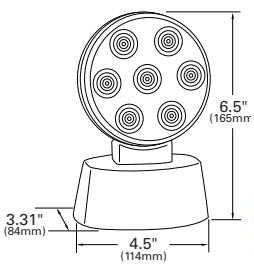

MAGNETIC LED TOWING KIT

Kit includes lamps, harness and hook-up connectors • Kit specifications include truck harness and 20 ft. connecting harness • Plugs into a standard flat four-way vehicle trailer light connector

65720-5 Red RETAIL

Material: ABS/Acrylic/Polycarbonate/PVC
Regulations / Standards: FMVSS 108 / SAE I, P2, S, T
Finish: Red
Volts / Amps: 12V / .25A (I, S) / .04A (P2, T)
VMRS Code: 034-002-013

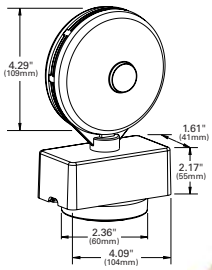

MAGNETIC TOWING KIT

Kit includes harness, lamp and hook-up connectors • Kit specifications include truck harness and 20 ft. connecting harness • Plugs into a standard, flat four-way vehicle trailer light connector • Lens and bulb are replaceable

65730-5 Red RETAIL

Material: ABS/Acrylic
Regulations / Standards: FMVSS 108 / SAE I, P2, S, T
Finish: Red
Bulb: (2) 32 CP, 1157; Volts / Amps: 12V / 2.1A (I, S) / .59A (P2, T)
Lens: 90232
VMRS Code: 034-002-013

TRAILER WIRING FRAME CLIP

Holds wire harness to frame and trailer

99460-5 10-Pack RETAIL

Material: Spring Steel
Finish: Black
VMRS Code: 034-004-023

 © 2019 All Rights Reserved, Grote® Industries, Inc.

25' SPLIT-WIRE HARNESS

4-wire, split-Y trailer harness with male connector

68420 Wire Harness

VMRS Code: 034-001-012

BOAT & UTILITY TRAILER WIRING KIT

For durable re-wiring of boat, bike, snowmobile, or utility trailers
- A complete wire-harness package: 25' trailer harness, 4' trunk harness and six no-splice connectors

68540-5 RETAIL

VMRS Code: 034-001-012

REPLACEMENT LENSES

LENS MODEL NUMBER	FITS LAMP
90342	50532
90652	52482 52492
91112	50532
91113	65230-5 65370-5

LENS MODEL NUMBER	FITS LAMP
91122	52442 52452
92792	52302 52312

90342

90652

91112, 91113

91122

92792

© 2019 All Rights Reserved, Grote® Industries, Inc.

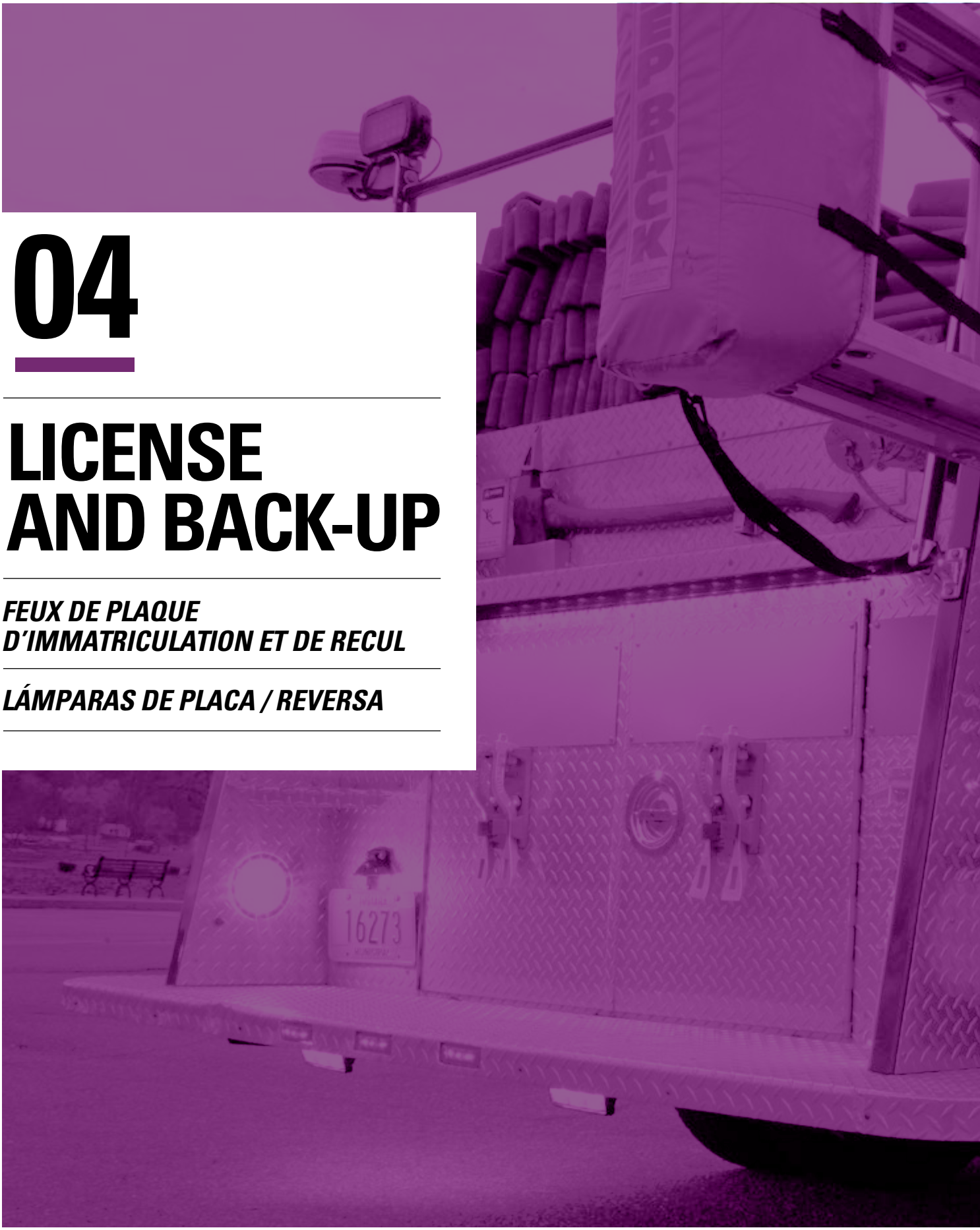

04

LICENSE AND BACK-UP

FEUX DE PLAQUE D'IMMATRICULATION ET DE RECUL

LÁMPARAS DE PLACA / REVERSA

WWW.GROTE.COM | © 2019 All Rights Reserved, Grote® Industries, Inc.

MICRONOVA® MULTI-VOLT LED LICENSE LAMP

Durable one-piece LED lamp design • Hardwire with .180 slim-line ULTRA-BLUE-SEAL® plug connections for maximum performance • Indexed, snap-fit mounting to brackets • Angled drain slots to prevent buildup behind the light • Direct replacement to existing 60601 (LED) and 60261 (incandescent) offerings

60671	Lamp Only	ECE	MULTI
VERTICAL MOUNT KIT:			
60701	Black (60671 + 43962)	ECE	MULTI
60681	Gray (60671 + 43960)	ECE	MULTI
60781	Gray (60671 + 42332)	ECE	MULTI
60791	Black (60671 + 42322)	ECE	MULTI
HORIZONTAL MOUNT			
60691	Black (60671 + 42162)	ECE	MULTI

Material: Polycarbonate
Regulations / Standards: FMVSS 108, ECE R4 / SAE L
Finish: Clear / Gray / Black
Volts / Amps: 9–32V / .03A
Brackets: 43960, 43962
VMRS Code: 034-002-042

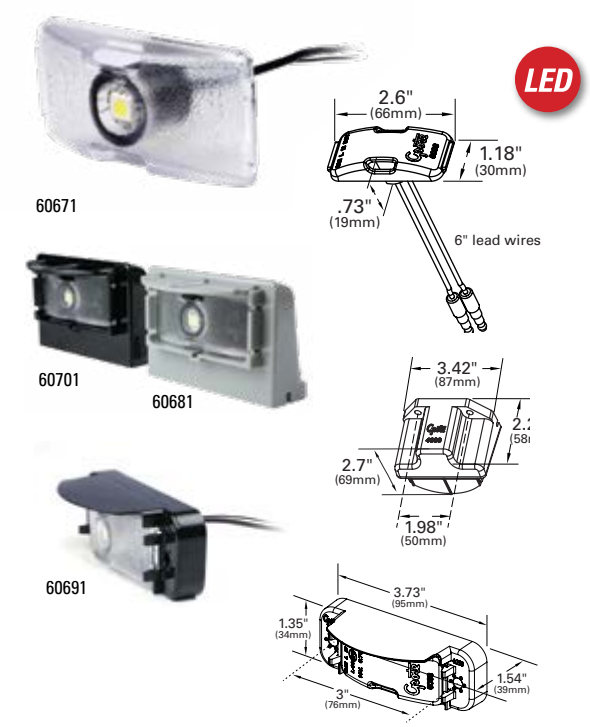

MICRONOVA® MULTI-VOLT DOT LED LICENSE LAMP

Durable one-piece LED lamp design • Hardwire with .180 slim-line ULTRA-BLUE-SEAL® plug connections for maximum performance • 60661 direct replacement to existing 60291 (incandescent) offering

60721	Lamp w/ Hooded Grommet		ECE	MULTI
60721-5	Lamp w/ Hooded Grommet	RETAIL	ECE	MULTI
60861	Lamp w/ Hooded Grommet Deutsch® Connector			MULTI
60661	DOT Lamp with Adaptor Bracket		ECE	MULTI
60651	DOT Lamp		ECE	MULTI
KITS				
60711	Gray (60661 + 43780)		ECE	MULTI

Material: Lens and Bracket - Polycarbonate; Grommet - PVC
Regulations / Standards: FMVSS 108, ECE R4 / SAE L
Finish: Clear / Gray / Black
Volts / Amps: 9–32V / .03A
Grommets: 94360;
Brackets: 43780, 43783
Adaptor Plate: 94350
VMRS Code: 034-002-042

© 2019 All Rights Reserved, Grote® Industries, Inc.

LED

SUPERNOVA® LED LICENSE LAMP

Low-profile shape helps prevent damage from dock collisions • Vibration-resistant lamp is ideal for dump trucks, refuse haulers and cement mixers • Slotted mounting holes fit most lamp mounting screw patterns and withstands excessive torque without cracking

60381 Gray
60341 Black

Material: Polycarbonate
Regulations / Standards: FMVSS 108 / SAE L
Finish: Gray / Black
Volts / Amps: 12V / .04A
VMRS Code: 034-002-042

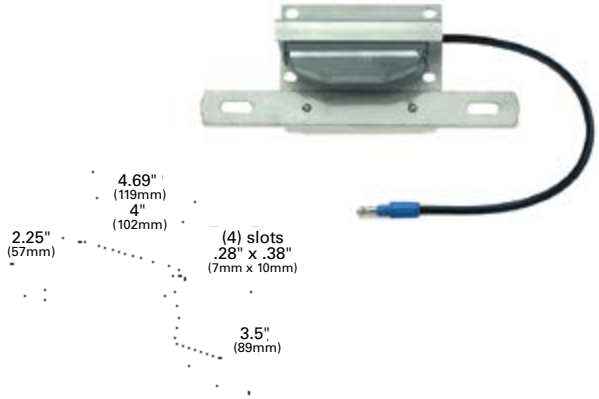

RECTANGULAR LICENSE LAMP WITH BRACKET

Aluminum lamp bracket and stainless steel license-plate bracket • Complete assembly includes dual-function bracket, license lamp (60291), lamp bracket (43390) and 48", 14-gauge .180 bullet ULTRA-BLUE-SEAL® pigtail • License bracket not sold separately

60321 Clear w/ Stainless Steel Bracket

Material: Lens - Polycarbonate; Housing - Aluminum; Bracket - Stainless Steel
Regulations / Standards: FMVSS 108 / SAE L
Finish: Aluminum
Bulb: 193, 2 CP (x2)
Volts / Amps: 12V / .66A
Light: 60291
VMRS Code: 034-002-021

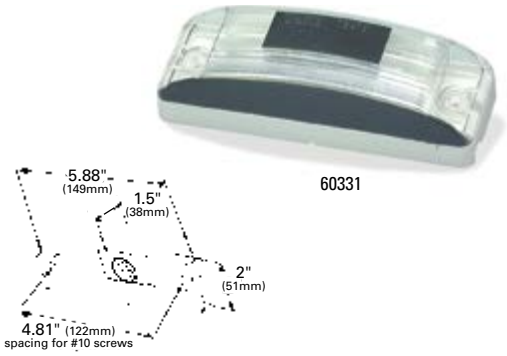

SEALED TURTLEBACK® II LICENSE LAMP

Impact-resistant bulb contacts • Waterproof male pin connection accepts ULTRA-BLUE-SEAL® pigtail

60331 Clear

Material: Polycarbonate
Regulations / Standards: FMVSS 108 / SAE L
Finish: Clear
Bulb: 193, 2 CP (x2)
Volts / Amps: 12V / .66A
Pigtail: 66910, 66911, 67070, 67071
VMRS Code: 034-002-021

 © 2019 All Rights Reserved, Grote® Industries, Inc.

2" TWIST-IN SEALED LICENSE LAMP

Kit includes hooded mounting bracket with lamp • Twist-on mounting • Accepts ULTRA-BLUE-SEAL® pigtail • Factory sealed

45821 Clear

KITS:

60191 Clear (45821 + 43040)

Material: Polycarbonate
Regulations / Standards: FMVSS 108 / SAE L when used with 43040 bracket
Finish: Clear
Bulb: 193, 2 CP
Volts / Amps: 12V / .33A
Bracket: 43040
Pigtail: 66850, 66851, 66800, 66840, 67001, 67050, 66801
VMRS Code: 034-002-021

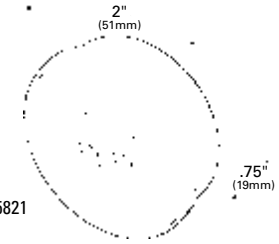

45821

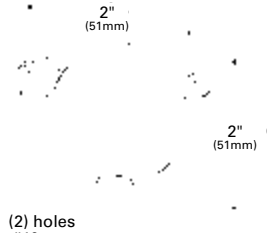

60191

(2) holes
for #10 screws

SMALL RECTANGULAR LICENSE LAMP

Sonically sealed lens design • Single 15,000-hour bulb

LICENSE LAMPS:

60261 Clear

LICENSE LAMP KITS:

60280 Clear (60261 + 43830)
60460 Clear Lamp, Gray Flange (60261 + 43960)

Material: Polycarbonate
Regulations / Standards: FMVSS 108 / SAE L
Finish: Clear
Bulb: 2 CP
Volts / Amps: 12V / .33A
Bracket: 43830,43960
Pigtail: 66850, 67050, 67001, 66851, 66800, 66840
VMRS Code: 034-002-021

60261

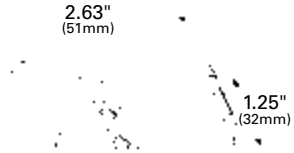

43960

RECTANGULAR LICENSE LAMP

Sonically sealed rectangular double-bulb lamp • Narrow mounting applications • 15,000-hour bulbs

60291 Clear

Material: Polycarbonate
Regulations / Standards: FMVSS 108 / SAE L
Finish: Clear
Bulb: 193, 2 CP (x2)
Volts / Amps: 12V / .66A
Bracket: 43780, 43783, 43850
Pigtail: 66980, 66981, 66982
VMRS Code: 034-002-021

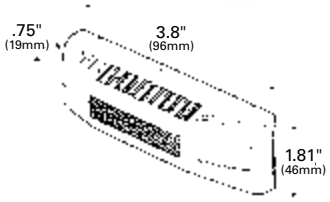

© 2019 All Rights Reserved, Grote® Industries, Inc.

60011

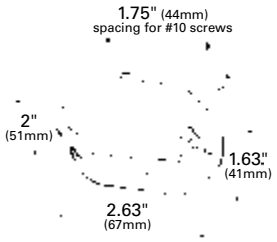

RESEALABLE LICENSE LAMP

Compact license lamp protrudes less than 2" • Housing snaps firmly into molded O-ring

60001 Gray
60011 Triple Chrome
60011-5 Triple Chrome RETAIL
60121 Gray w/ UBS .180-Bullet Plug-In Pigtail

PROTECTIVE LENS CAP:

93610 Gray

Material: Lens - Polycarbonate; Housing - Chrome-Plated ABS
Regulations / Standards: FMVSS 108 / SAE L
Finish: Gray / Chrome
Bulb: 67, 4 CP
Volts / Amps: 12V / .59A
Accessory: Gray Cap: 93610
VMRS Code: 034-002-021

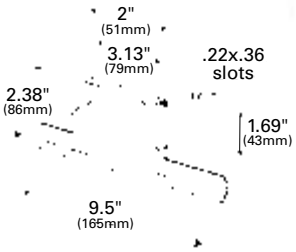

LICENSE LAMP WITH METAL BRACKET

Compact license lamp protrudes less than 2" • Housing snaps firmly into molded-in O-ring • Uses 60001 license lamp with 7" pigtail

60081 Clear

PROTECTIVE LENS CAP:

93610 Gray

Material: Lens - Polycarbonate; Housing - Steel
Regulations / Standards: FMVSS 108 / SAE L
Finish: Black / Gray / Clear
Bulb: 67, 4 CP
Volts / Amps: 12V / .59A
VMRS Code: 034-002-021

LED

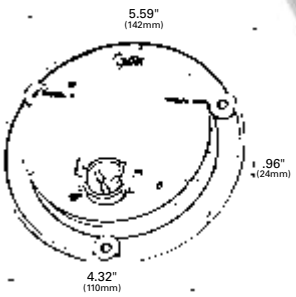

SUPERNOVA® 4" FLANGED LED HOOK UP LAMP

Directly mounts and replaces existing hook-up lamps • Sealed flange-to-lens design • Housing to truck gasket included to keep moisture and elements out • Male pin connection • Provides more light to hook up power and air in the nose box area than existing lamps

60631 Clear

Material: Polycarbonate
Finish: Clear
Volts / Amps: 12V / 0.5A
Pigtail: 66842, 67013, 66846
VMRS Code: 034-002-042

 © 2019 All Rights Reserved, Grote® Industries, Inc.

SUPERNOVA® 4" SINGLE-SYSTEM LED BACK-UP LAMP

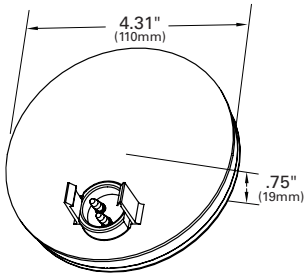

Meets back-up function with single-lamp system • Encapsulant potting for total circuit-board protection • Advanced pin connection system uses tin-plated, solid-brass pin terminals • Hard-coated lens for long-term UV protection

62401 Clear, Male Pin

Material: Polycarbonate
Regulations / Standards: FMVSS 108 / SAE R
Finish: Clear
Volts / Amps: 12V / .6A
Bracket: 43343, 92510, 92512, 92513, 43253
Grommet: 91740, 91950
Pigtail: 66842, 67013, 66846, 66816
VMRS Code: 034-003-142

4" TORSION MOUNT® II SINGLE-SYSTEM BACK-UP LAMP

Torsion Mount® II Gel-Mount® bulb cradle design • Meets back-up function with single-lamp system • Hermetic lens-to-housing seal

62211 Clear, Male Pin
62271 Clear, Female Pin

KITS:

62331 Clear, Female Pin (62271 + 91740 + 67010)

Material: Polycarbonate
Regulations / Standards: FMVSS 108 / SAE R
Finish: Clear
Bulb: 2057 32/2 CP
Volts / Amps: 12V / 2.1A
Bracket: 43572, 43253, 92510, 92512, 92513
Grommet: 91740, 91950
Pigtail: Male Pin: 66842, 67013, 66846
Female Pin: 67011, 67010, 67014, 67020
VMRS Code: 034-003-074

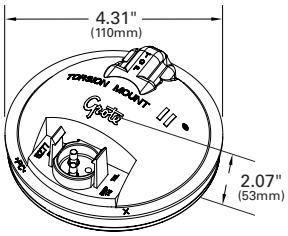

62211

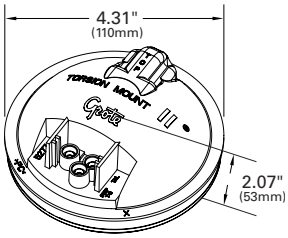

62271

SUPERNOVA® 4" DUAL-SYSTEM LED BACK-UP LAMP

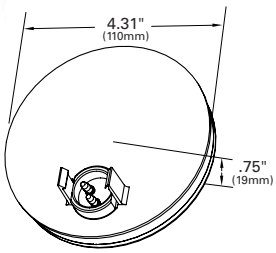

Requires two lamps to meet back-up function • Advanced pin connection system uses tin-plated, solid-brass terminations • Hard-coated lens for long-term UV protection

62391 Clear
62571 Clear 24 VOLT

Material: Polycarbonate
Regulations / Standards: FMVSS 108 / SAE (2)R
Finish: Clear
Volts / Amps: 12V / .25A, 24V / .15A
Bracket: 43343, 92510, 92512, 92513, 43253
Grommet: 91740, 91950
Pigtail: 66842, 67013, 66846, 66816
VMRS Code: 034-003-142

© 2019 All Rights Reserved, Grote® Industries, Inc.

LED

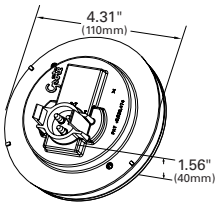

62091

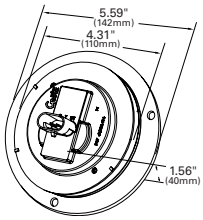

62791

SUPERNOVA® NEXGEN 4" DUAL-SYSTEM LED BACK-UP LAMP

Fits standard 4" lamp grommets and brackets • Hermetically sealed lamp prevents water intrusion • Requires two lamps to meet back-up function • Flanged lamps require no additional mounting brackets

62091 Clear, Male Pin
62101 Clear, Hard Shell

FLANGED W/GASKET

62791 Clear, Hard Shell ECE

Material: Lens - Acrylic; Housing - ABS
Regulations / Standards: FMVSS 108 / SAE (2)R
Finish: Clear
Volts / Amp: 12V / .55A
Bracket: 93552, 43253, 92510, 92511, 92513, 43572, 43642, 43655, 43732, 93553, 93683, 51090
Grommet: 91740, 91950
Pigtail: Male Pin: 66842, 67013, 66846, 66816; Hard Shell: 66862
VMRS Code: 034-003-142

LED

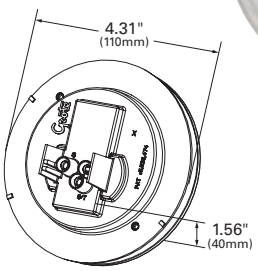

GROTE SELECT® 4" DUAL-SYSTEM LED BACK-UP LAMP

Fits standard 4" lamp grommets and brackets • Hermetically sealed lamp prevents water intrusion • Requires two lamps to meet back-up function • Standard aftermarket connection provides for ease of replacement

62691 Female Pin

Material: Lens - Acrylic; Housing - ABS
Regulations / Standards: FMVSS 108 / SAE (2)R
Finish: Clear
Volts / Amps: 12V / .55A
Bracket: 93552, 43253, 92510, 92511, 92512, 92513, 43572, 43642, 43655, 43732, 93190, 93553, 93683, 51090
Grommet: 91740, 91950
Pigtail: 66812, 66811
VMRS Code: 034-003-142

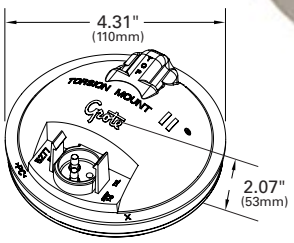

4" TORSION MOUNT® II DUAL-SYSTEM BACK-UP LAMP

Requires two lamps to meet back-up function • Torsion Mount® II Gel-Mount® bulb cradle design • Hermetic lens-to-housing seal • Kit includes lamp, grommet (91740) and pigtail (67010)

62121 Frosted Clear, Male Pin
62171 Frosted Clear, Female Pin
62321 Frosted Clear, Female Pin 24 VOLT

KITS:

62181 Frosted Clear, Female Pin (62171 + 91740 + 67010)

Material: Polycarbonate
Regulations / Standards: FMVSS 108 / SAE (2)R
Finish: Frosted
Volts / Amps: Bulb 2057, 32 CP: 12V / 2.1A
Bracket: 43572, 43253, 92510, 92512, 92513
Grommet: 91740, 91950
Pigtail: Male Pin: 66842, 67013, 66846, 67016;
Female Pin: 67010, 67014, 67011, 67020
VMRS Code: 034-003-074

 © 2019 All Rights Reserved, Grote® Industries, Inc.

SUPERNOVA® OVAL SINGLE-SYSTEM LED BACK-UP LAMP

Legal for horizontal mount only • Uses ULTRA-BLUE-SEAL® male pin pigtails • Retrofit upgrade for original equipment Volvo® trucks using the Grote® tail lamp system • Encapsulant potting for total circuit board protection

62561 Clear, Grommet Mount

Material: Lens - Acrylic; Housing - ABS
Regulations / Standards: FMVSS 108 / SAE R
Finish: Clear
Volts / Amps: 12V / .30A
Bracket: 43362, 43952, 43220, 43223, 43222, 43723, 43100
Grommet: 92420, 92720
Pigtail: 66842, 67013, 66846, 66816
VMRS Code: 034-003-142

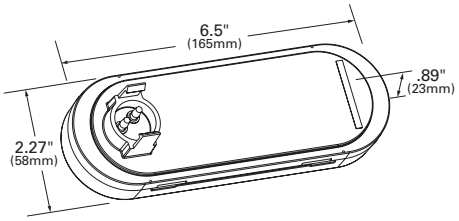

SUPERNOVA® OVAL DUAL-SYSTEM LED BACK-UP LAMP

Requires two lamps to meet back-up function • Fewer diodes reduces power consumption • Uses ULTRA-BLUE-SEAL® male pin pigtails

MALE PIN, HORIZONTAL MOUNT:

62601 Clear, Grommet Mount

MALE PIN, VERTICAL MOUNT:

62591 Clear, Grommet Mount

Material: Lens - Acrylic; Housing - ABS
Regulations / Standards: FMVSS 108 / SAE (2)R
Finish: Clear
Volts / Amps: 12V / .30A
Bracket: 43362, 43952, 43220, 43223, 43222, 43723, 43100
Grommet: 92420, 92720
Pigtail: 66842, 67013, 66846, 66816
VMRS Code: 034-003-142

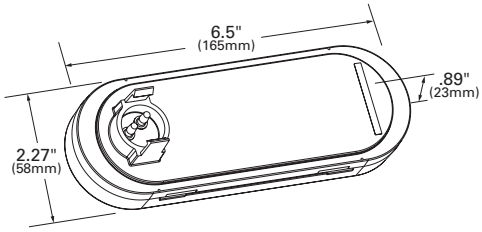

SUPERNOVA® NEXGEN OVAL DUAL-SYSTEM LED BACK-UP LAMP

Fits standard oval lamp grommets and brackets • Hermetically sealed lamp prevents water intrusion • Requires two lamps to meet back-up function • Lamps must be mounted vertically

62051 Male Pin

Material: Lens - Acrylic; Housing - ABS
Regulations / Standards: FMVSS 108 / SAE (2)R
Finish: Clear
Volts / Amps: 12V / .30A
Bracket: 43362, 43952, 43220, 43223, 43222, 43723, 43100
Grommet: 92420, 92720
Pigtail: 66842, 67013, 66846, 66816
VMRS Code: 034-003-142

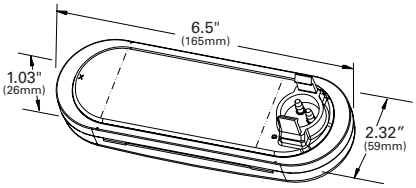

© 2019 All Rights Reserved, Grote® Industries, Inc.

LED

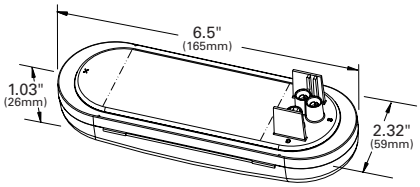

GROTE SELECT® OVAL DUAL-SYSTEM LED BACK-UP LAMP

Fits standard oval lamp grommets and brackets • Hermetically sealed lamp prevents water intrusion • Requires two lamps to meet back-up function • Lamps must be mounted vertically • Product uses standard aftermarket connection for ease of installation

62751 Female Pin

Material: Lens - Acrylic; Housing - ABS
Regulations / Standards: FMVSS 108 / SAE (2)R
Finish: Clear
Volts / Amps: 12V / .30A
Bracket: 43362, 43952, 43220, 43223, 43222, 43723, 43100
Grommet: 92420, 92720
Pigtail: 67010, 67011, 67014, 67020
VMRS Code: 034-003-142

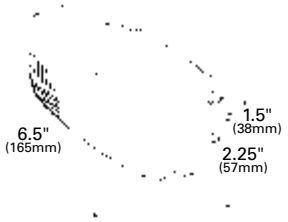

TORSION MOUNT® III OVAL DUAL-SYSTEM BACK-UP LAMP

Fits standard oval lamp grommets and brackets • O-ring seal design eliminates corrosion (male pin) • Requires two lamps to meet back-up function

62231 Clear, Female Pin

KITS:

62251 Clear, Female Pin (62231 + 92420 + 67010)

Material: Polycarbonate
Regulations / Standards: FMVSS 108 / SAE (2)R
Finish: Clear
Bulb: 1157, 32 CP
Volts / Amps: 12V / 2.1A
Bracket: 43362, 43952, 43220, 43222, 43223
Grommet: 92420, 92720
Pigtail: Female Pin: 67010, 67011, 67014, 67020
VMRS Code: 034-003-074

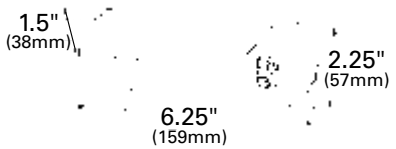

ECONOMY OVAL DUAL-SYSTEM BACK-UP LAMP

Requires two lamps to meet back-up function • Hermetic lens-to-housing seal • Fits standard oval lamp grommets and brackets • Standard female pin termination

62521 Clear, Female Pin

Material: Polycarbonate
Regulations / Standards: FMVSS 108 / SAE (2)R
Finish: Clear
Bulb: 1141
Volts / Amps: 12V / 2.1A
Bracket: 43362, 43952, 43220, 43222, 43223
Grommet: 92420, 92720
Pigtail: 67010, 67011, 67090
VMRS Code: 034-003-074

 © 2019 All Rights Reserved, Grote® Industries, Inc.

RECTANGULAR DUAL-SYSTEM BACK-UP LAMP

Tough polycarbonate lens • Hermetic lens-to-housing seal • Requires two lamps to meet back-up function

62381 Clear, Female Pin

Material: Polycarbonate
Regulations / Standards: FMVSS 108 / SAE (2)R
Finish: Clear
Bulb: 2057, 32 CP
Volts / Amps: 12V / 2.1A
Grommet: 94180
Pigtail: 67010, 67011, 67014, 67020
VMRS Code: 034-003-074

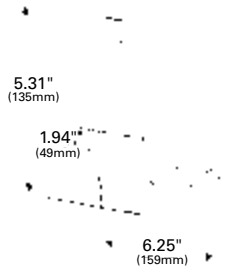

OE-STYLE DUAL-SYSTEM BACK-UP LAMP

Requires small 1 1/16" hole for installation • Mounting pad included • For use on buses and trucks • Requires two lamps to meet back-up function

62011 Gray Bezel
62021 Chrome-Plated Bezel

Material: Lens - Acrylic; Housing - Steel; Bezel - ABS, Chrome-plated ABS
Regulations / Standards: FMVSS 108 / SAE (2)R
Finish: Clear / Gray
Bulb: 1156, 32 CP
Volts / Amps: 12V / 2.1A
Pigtail: 68080
Lens: Clear 90221
VMRS Code: 034-003-074

62011

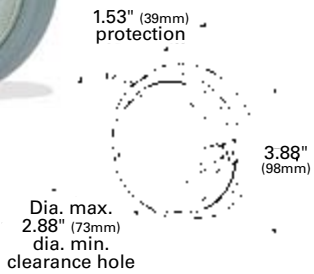

STAINLESS STEEL RECESSED DUAL-SYSTEM BACK-UP LAMP

Snap-in lens for easy replacement • Requires two lamps to meet back-up function

62151 Clear

Material: Lens - Polycarbonate; Housing - Stainless Steel
Regulations / Standards: FMVSS 108 / SAE (2)R
Finish: Clear
Bulb: 1156, 32 CP
Volts / Amps: 12V / 2.1A
Lens: Clear 91311, Clear 90011
VMRS Code: 034-003-074

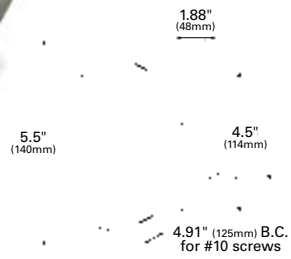

© 2019 All Rights Reserved, Grote® Industries, Inc.

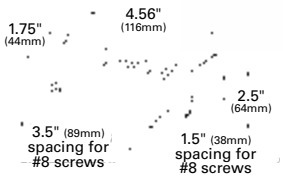

RECTANGULAR SURFACE MOUNT DUAL-SYSTEM BACK-UP LAMP

Raised lens for maximum light output • Surface mount requires no socket hole or cutout • Requires two lamps to meet back-up function

62291 Clear

Material: Lens - Polycarbonate; Housing - Steel
Regulations / Standards: FMVSS 108 / SAE (2)R
Finish: Clear
Bulb: 1156, 32 CP
Volts / Amps: 12V / 2.1A
VMRS Code: 034-003-074

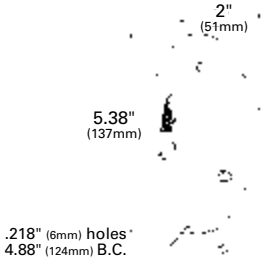

SHALLOW DIE-CAST UTILITY LAMP

Chrome-plated die-cast housing • Shallow profile for exterior sleeper cab application • Blunt cut wires

60311 Clear

Material: Lens - Acrylic; Housing - Zinc-plated Steel
Finish: Clear
Bulb: 1156, 32 CP
Volts / Amps: 12V / 2.1A
Lens: Clear 91581, Red 91582, Yellow 91583
VMRS Code: 034-004-068

 © 2019 All Rights Reserved, Grote® Industries, Inc.

PIGTAILS FOR 2", 2½", & FEMALE PIN LAMPS

For more information on pigtail products see **Pigtails** section: page 254

SEALED MARKER LAMP PIGTAILS

DOUBLE SEAL:	
67001	6" Long, Ring Terminal Ground, Blunt Cut Wire
66850	6" Long, Chassis Ground
66851	6" Long, Ground Return
SINGLE SEAL:	
66801	6" Long, Ground Return
67050	6" Long, Ring Terminal Ground, Blunt Cut Wire
67050-5	6" Long, Ring Terminal Ground, Blunt Cut Wire RETAIL
66840	6" Long, Chassis Ground, Standard .180 Male
66800	6" Long, Chassis Ground, Slim-Line .180 Male

PIGTAILS FOR MALE PIN LAMPS

CLEARANCE / MARKER PIGTAILS

66980	6" Long, Chassis Ground, Slim-Line .180 Male
66981	6" Long, Universal Replacement, Blunt Cut, Ring Terminal Grommet
66982	8" Long, Ground Return

PIGTAILS FOR TURTLE BACKS

TURTLEBACK® II DOUBLE-SEAL LAMP PIGTAILS

66910	6" Long, Chassis Ground, Slim-Line .180 Male
66911	6" Long, Ground Return, Standard .180 Male
67070	2 1/2" Long, Ground Wire, Standard .180 Male
67071	Two-Wire, Standard .180 Male

STOP / TAIL / TURN THREE-WIRE 90° PLUG-IN PIGTAILS FOR MALE PIN LAMPS

66816	6" Long, Ground Return System, 90° Plug, Slim-Line .180 Male

© 2019 All Rights Reserved, Grote® Industries, Inc.

PIGTAILS FOR 4" ROUND & 6" OVAL LAMPS

For more information on pigtail products see **Pigtails** section: page 254

SINGLE FUNCTION TWO-WIRE PLUG-IN PIGTAILS FOR MALE PIN LAMPS

67013	11" Long, Chassis Ground, Blunt Clut Wire
66842	10" Long, Chassis Ground, Slim-Line .180 Male

67013

66842

SINGLE FUNCTION TWO-WIRE 90° PLUG-IN PIGTAILS FOR MALE PIN LAMPS

66846	10" Long, Chassis Ground, 90° Plug, Slim-Line .180 Male
67016	11" Long, Chassis Ground, 90° Plug, Blunt Cut Wires

66846

67016

STOP/TAIL/TURN THREE-WIRE PLUG-IN PIGTAILS FOR FEMALE PIN LAMPS

66812	6" Long, Chassis Ground, Slim-Line .180 Male
67000	11 1/2" Long, Chassis Ground, Blunt Cut Wires

66812

67000

STOP/TAIL/TURN THREE-WIRE 90° PLUG-IN PIGTAILS FOR FEMALE PIN LAMPS

66811	18" Long, Chassis Ground, Slim-Line .180 Male, Star Ring Terminal

66811

TWO-WIRE PLUG-IN PIGTAILS FOR FEMALE-PIN LAMPS

STRAIGHT:

67010	11 1/2" Long, Chassis Ground, Blunt Cut
67011	10 1/4" Long, Chassis Ground, Standard .180 Male

90° PLUG:

67014	10" Long, Chassis Ground, Blunt Cut
67020	10" Long, Ground Return, Slim-Line .180 Male

67010

67011

67014

67020

3" – 5" LAMP MOUNTING

For more information on mounting products see **Mounting Options** section: page 264

MOUNTING BRACKET FOR LARGE RECTANGULAR LAMPS

43780	Gray Bracket
43783	Chrome-Plated Bracket, ABS

KITS:

Material: Polycarbonate/ABS
Finish: Gray/Chrome

LOW PROFILE MOUNTING BRACKET

43850 Gray

Material: Polycarbonate
Finish: Gray

 © 2019 All Rights Reserved, Grote® Industries, Inc.

LICENSE LAMP MOUNTING

For more information on mounting products see **Mounting Options** section: page 264

LICENSE LAMP MOUNTING BRACKET

43040 White

Material: Polycarbonate
Finish: White

LICENSE LAMP MOUNTING BRACKET

43830 Gray

Material: Polycarbonate
Finish: Gray
Grommet: 92520

LICENSE LAMP BRACKET FOR SMALL RECTANGULAR LAMPS

42162 Black

Material: Polycarbonate
Finish: Black

LICENSE LAMP MOUNTING BRACKET

43960 Gray
43962 Black

Material: Polycarbonate
Finish: Gray/Black

BACK-UP LAMP MOUNTING

RECESSED MOUNTING GROMMET FOR 4" ROUND LAMPS

91740 Grommet

Material: PVC
Finish: Black

CLOSED BACK RECESSED MOUNTING GROMMET FOR 4" ROUND LAMPS

91950 Grommet

Material: PVC
Finish: Black

STAINLESS STEEL SNAP-IN THEFT-RESISTANT MOUNTING FLANGE FOR 4" ROUND LED LAMPS

93683 Stainless Steel

Material: Stainless Steel
Finish: Stainless Steel

SNAP-IN THEFT-RESISTANT MOUNTING FLANGE FOR 4" ROUND LED LAMPS

93552 Black
93553 Chrome-Plated

Material: ABS
Finish: Black/Chrome

THEFT-RESISTANT MOUNTING FLANGE FOR 4" ROUND LAMPS

92510 White, Polycarbonate
92512 Black, Polycarbonate
92513 Chrome-Plated, ABS
92511 Gray, Polycarbonate
43253 Stainless Steel

Material: Polycarbonate; Stainless Steel; ABS

ANGLED MOUNTING BRACKET FOR 4" ROUND LAMPS

43572 Black, 90° angle bracket

Material: Steel
Finish: Black Powder-Coated
Grommet: 91740

© 2019 All Rights Reserved, Grote® Industries, Inc.

BACK-UP LAMP MOUNTING

For more information on mounting products see **Mounting Options** section: page 264

MOUNTING MODULE FOR 4" ROUND LAMPS

43655	Yellow Zinc
51090	Gray

Material: Steel
Finish: Yellow Zinc/Gray Powder-Coated

2-LAMP MOUNTING MODULE FOR 4" ROUND LAMPS

43642 Black, Powder-Coated

Material: Steel
Finish: Black

MOUNTING MODULE FOR 4" ROUND LAMPS

43732 Black

Material: Steel
Finish: Black

RECESSED MOUNTING GROMMET FOR 6" OVAL LAMPS

92420	Open Grommet
92720	Closed Back Grommet

Material: PVC
Finish: Black

THEFT-RESISTANT MOUNTING FLANGE FOR 6" OVAL LAMPS

43220	Gray, Polycarbonate
43222	Black, Polycarbonate
43223	Chrome-Plated, ABS
43723	Stainless Steel

Material: Polycarbonate/Stainless Steel/ABS
Finish: Gray/Black/Stainless Steel/Chrome

ANGLED MOUNTING BRACKET FOR 6" OVAL LAMPS

43362 Black, 90° angle bracket

Material: Steel
Finish: Black
Grommet: 92420

"Z" MOUNTING BRACKET FOR 6" OVAL LAMPS

43952 Black

Material: Steel
Finish: Black
Grommet: 92420

RECESSED MOUNTING GROMMET FOR RECTANGULAR LAMPS

94180 Mounting Grommet

Material: PVC
Finish: Black

MOUNTING BRACKET FOR 6" OVAL LAMPS AND STROBES

43100 Black

Material: Steel
Finish: Black
Grommet: 92420

THEFT-RESISTANT MOUNTING FLANGE FOR 4" ROUND LAMPS

92510 White, Polycarbonate

Material: Polycarbonate
Finish: White

Deutsch® is a registered trademark of TE Connectivity Corporation.

All product and company names are trademarks™ or registered® trademarks of their respective holders. Use of them does not imply any affiliation with or endorsement by them.

 © 2019 All Rights Reserved, Grote® Industries, Inc.

REPLACEMENT LENSES

LENS MODEL NUMBER	FITS LAMP
90221	62011 62021
90011	62151
91581	60311

90221

90011

91581

NEED HELP FINDING THE RIGHT PRODUCT?

In a world of automated phone systems and outsourced customer service it's rare to contact **REAL PEOPLE** with **REAL EXPERIENCE** providing **REAL SOLUTIONS.**

That is exactly what you get from Grote's team of expert Sales and Customer Solutions personnel.

GROTE® CUSTOMER SERVICE IS JUST A PHONE CALL AWAY | **800-628-0809**

05

INTERIOR LIGHTING

LUMIÈRES D'INTÉRIEUR

LÁMPARAS PARA INTERIOR

 © 2019 All Rights Reserved, Grote® Industries, Inc.

LED WHITELIGHT RECESSED-MOUNT 18" DOME LAMP

LED

FEATURES & BENEFITS

- Robust, one-piece, aluminum housing and removable acrylic lens
- Built-in automatic thermal protection circuit

61291

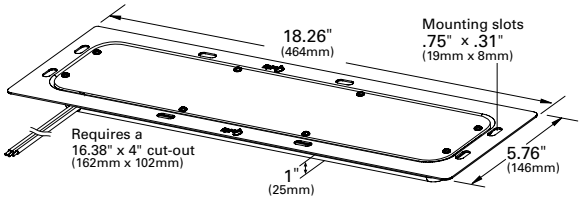

61261

61F61

Part Number	Product Description	Light Output (Usable)	Operating Temperature	Design Voltage (V)	Amp Draw (A)
61611	High output, 18 diodes	1200 Lm	-40°F to +122°F	12	2.16
61G21	High output, 18 diodes, w/ motion sensor	1200 Lm	-4°F to +122°F	12	2.16
61E61	High output, 18 diodes, dimmable	1200 Lm	-40°F to +122°F	12	2.17/.71
61111	High output, 16 diodes	1000 Lm	-40°F to +122°F	24	1
61261	Standard output, 10 diodes	800 Lm	-40°F to +122°F	12	1.75
61F61	Standard output, 10 diodes w/ motion sensor	800 Lm	-4°F to +122°F	12	1.75/.02
61881	Low output, 10 diodes	400 Lm	-40°F to +122°F	12	1.2
61291	Standard output, 6 diodes	940 Lm	-40°F to +122°F	12	1.7
61N11	Standard output, bi-volt, 6 diodes w/ motion sensor	940 Lm	-4°F to +122°F	12/24	1.7/.85
61H91	Standard output, 6 diodes w/ motion sensor	940 Lm	-4°F to +122°F	12	1.7/.02
61M11	Standard output, 6 diodes PIR / interconnected	940 Lm	-40°F to +122°F	12	1.7/.02
61J11	Standard output, 6 diodes, 4-wire, Hyundai®	940 Lm	-4°F to +122°F	12	.175

Accessories

Part Number	Description	Fits
94621	Replacement Lens	Round Corner Lenses
43540	Mounting Pan	All 18" Dome Lamps

Materials
Housing: Aluminum; Lens: Acrylic (61G21, 61F61, 61H91) Housing: Aluminum; Lens: Polycarbonate Finish: White

VMRS Code: 034-004-452

© 2019 All Rights Reserved, Grote® Industries, Inc.

LED WHITELIGHT RECESSED-MOUNT INTERIOR DOME LAMP

LED

FEATURES & BENEFITS
- LED lamp is rated to 50,000 service hours
- Fits existing similar incandescent lamp mountings
- Low heat; will not melt lens

61861

61931

61F51

82080

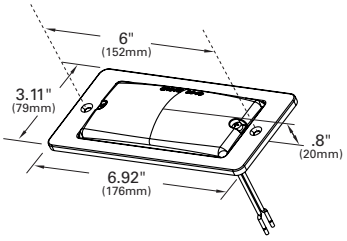

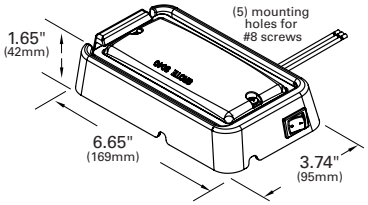

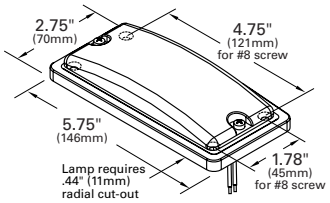

Part Number	Product Description	Designation	Lighting Technology	Connection Type	Light Output (Usable)	Design Voltage (V)	Amp Draw (A)
61861 MULTI	Gray Aluminum Housing, 6 Diodes	Dome	LED	Hardwire	300 Lm	12/24	.3 @ 12V .16 @ 24V
61991	Gray Aluminum Housing, 6 Diodes	Dome	LED	Hardwire	300 Lm	12	0.48
61871 MULTI	Gray Aluminum Housing, 3 Diodes	Courtesy	LED	Hardwire	150 Lm	9-30	.32 @ 9V .094 @ 30V
61931 MULTI	Gray Aluminum, Flange Mount Housing, 6 Diodes	Dome	LED	Hardwire	300 Lm	12/24	.3 @ 12V .16 @ 24V
82080 MULTI	Black Aluminum Housing, 3 White, 3 Red Diodes	Dome	LED	Tyco® #770331-1	150 Lm	10-30	.250 @ 12V .140 @ 24V
61F30 MULTI	Black Surface Mount Plastic Housing W/ Switch, 4 White, 4 Red Diodes	Dome	LED	Hardwire	200 Lm	10-32	.250 @ 12.8V .140 @ 25.6V
61F51	Black Surface Mount Plastic Housing W/ Switch, 6 White Diodes	Dome	LED	Hardwire	300 Lm	12	.480 @ 14V
61031	Gray Steel Housing	Dome	Incandescent	Hardwire	15 CP	12	1.1 @ 12V

Accessories

Part Number	Description	Fits
90401	Replacement Lens	All

VMRS Code: 034-004-083 - 61031
034-004-452 - 61861, 61991, 61871, 67931, 82080, 61F30, 61F51

 © 2019 All Rights Reserved, Grote® Industries, Inc.

LED WHITELIGHT 4" DOME LAMP

LED

FEATURES & BENEFITS

- Shock-absorbing, weatherproof housing with long-life LEDs makes this a very durable lamp
- Cost-effective LED lighting option is rated at 50,000 hours
- LEDs utilize lower amp draw, putting less load on strained electrical systems
- Hardwired for easy integration into current wiring system
- Uses 70% less power than incandescent options

61E41

61H01

61171

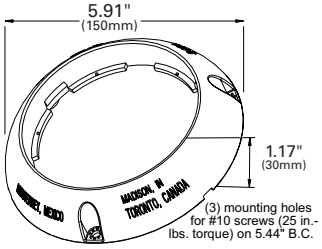

61171

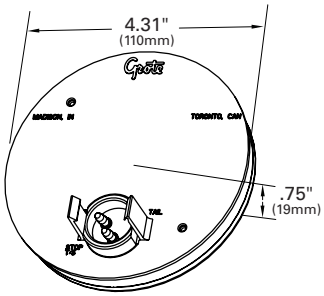

61E41

Part Number	Product Description	Lighting Technology	Light Output (Usable)	Connection Type	Design Voltage (V)	Amp Draw (A)
61H51	4" Integrated Flange	LED	400 Lm	Hardwire w/2-Way Female	12	.6A
61E41	4" Grommet Mount	LED	400 Lm	Male Pin	12	.6A
61H01	4" Grommet Mount	LED	400 Lm	Hardwire	12	.6A
61171	4" Surface Mount w/ Switch	LED	400 Lm	Hardwire	12	.6A

Accessories

Part Number	Description	Fits
67013, 66842, 66846, 67016	Male Pin Pigtail	61E41

VMRS Code: 034-004-452

© 2019 All Rights Reserved, Grote® Industries, Inc.

LED

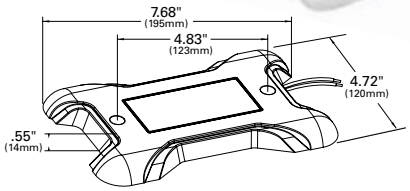

LED WHITELIGHT X-100 DOME LAMP

Built-in automatic thermal protection circuit • Surface mountable; versatile design means both wall or ceiling mountings are possible • Fast installation with 2 self-tapping screws and no holes to cut

61121 White

Material: Polycarbonate
Finish: Clear
Volts / Amps: 12V / .6A
VMRS Code: 034-004-452

LED

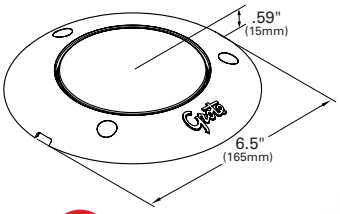

S100 LED WHITELIGHT SURFACE MOUNT DOME LAMP

Low profile sleek design, less than 15 mm height • Moisture proof construction allows for a wide variety of uses • Surface mount allows for quick and easy installation • 560 lumens of output • Operates at -40F° to +122F° • ECE R10

61331 S100, 12V/24V w/ motion sensor MULTI ECE
61341 S100, 12V/24V MULTI ECE

Material: Polycarbonate
Finish: White / Clear
Volts / Amps: 12V, 24V / 0.6A at 14V, 0.3A at 24V
VMRS Code: 034-004-452

LED

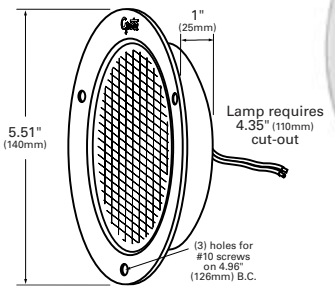

4" ROUND FLANGE MOUNT LED DOME LAMP

Hardwire terminations allow for easy connections to the existing wiring system • Chemical resistant acrylic lens, white powder-coated housing • Operates at a wide temperature range, from -40°F to +122°F

61141 White

Material: Aluminum / Acrylic
Finish: Clear
Volts / Amps: 12V / .48A
VMRS Code: 034-004-452

LED

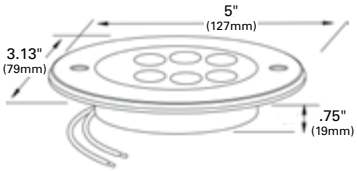

LED COMPARTMENT LAMP

Shock and Vibration Proof • 50,000 hours of service life • Can be Recess or Surface Mounted •For Interior Use Only

61851 Clear, Push Lens for On/Off
61851-5 Clear, Push Lens for On/Off RETAIL

Material: Polycarbonate
Finish: black
Volts / Amps: 12V

 © 2019 All Rights Reserved, Grote® Industries, Inc.

TORSION MOUNT® II 4" ROUND DOME LAMP

Gel-Mount® bulb cradle design • O-ring seal pigtail design eliminates corrosion • Locking tabs ensure secure pigtail connection • Hermetic lens-to-housing seal

61451 Clear, Male Pin
61051 Clear, Female Pin

Material: Polycarbonate
Finish: Clear
Bulb: 15 CP
Volts / Amps: 12V / 1.04A
Bracket: 43572, 43253, 92510, 92512, 92513
Grommet: 91740, 91950
Pigtail: Male Pin: 67013, 66842, 66846, 67016;
Female Pin: 67010, 67011, 67020, 67014
VMRS Code: 034-004-083

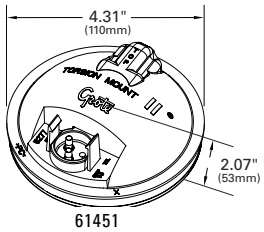

61451

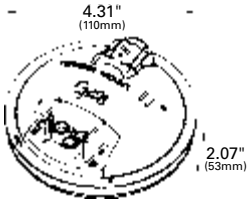

61051

ROUND DOME LAMP WITH SWITCH

Surface mount lamp • Design resists corrosion and lens shattering due to heat build-up • Low profile to protect against knock-off by load or personnel

61161 White Base
61091 Chrome Base

Material: Polycarbonate
Finish: Clear
Bulb: 93, 15 CP
Volts / Amps: 12V / 1.04A
Pigtail: 68170
Lens: White 91101
VMRS Code: 034-004-083

61091

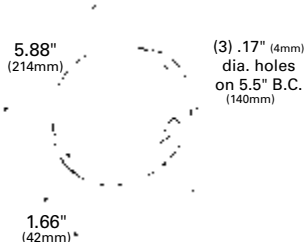

6" SURFACE MOUNT DOME LAMP WITH SWITCH

Perfect for use as a compartment lamp • Popular lamp for bus and RV applications • Separate ground wire • Not suitable for use in headliners or confined spaces • Push button

61821 Clear

Material: Aluminum
Finish: Clear
Bulb: 1141, 21 CP
Volts / Amps: 12V / 1.44A
VMRS Code: 034-004-083

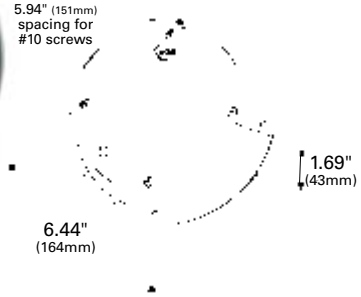

LED WHITELIGHT 7" ROUND DOME LAMP

High-output white LED dome lamp • Encapsulant potting for total circuit board protection against moisture and corrosion • Designed to operate in extreme-cold temperatures down to -40°F • Shallow recess requires only 1 1/4" depth for mounting pan • Self-resetting cut-off feature to protect against excess heat

61811 Clear

Material: Powder-Coated Steel / Acrylic
Finish: White / Clear
Volts / Amps: 12V / 1.92A
VMRS Code: 034-004-452

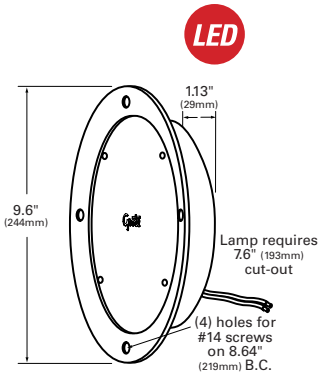

© 2019 All Rights Reserved, Grote® Industries, Inc.

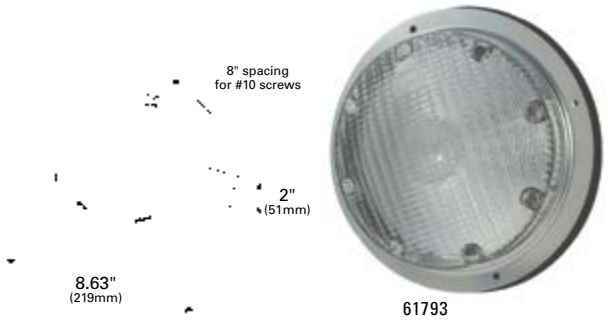

8" SURFACE MOUNT DOME LAMP

7" diameter lens • Separate ground wire • Popular for use as a "scare" lamp on RVs • Not suitable for use in headliners or confined spaces

61793 Clear, Stainless Steel Housing

Material: Steel
Finish: Stainless / White / Clear Lens
Bulb: 1156, 32 CP
Volts / Amps: 12V / 2.1A
VMRS Code: 034-004-083

LED

LED SLIMLITE COURTESY LAMP

Lamp features a low profile less than one inch • High efficiency lamp uses little power and generates minimal heat • Excellent option for cabinet lighting and other interior uses

60581 Clear
60591 Clear, w/ Switch

Material: Polycarbonate
Finish: Clear
Volts / Amps: 12V / .4A
VMRS Code: 034-004-068

LED

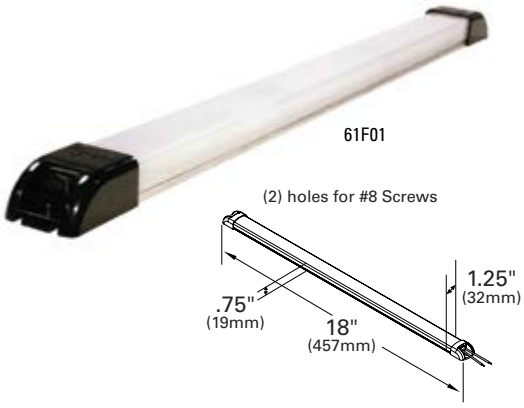

LED SLIMWHITE

High-output 500-lumen LED dome lamp emits low heat • Tough polycarbonate lens • Sturdy aluminum base • Profile is less than 3/4" high • Rated at 50,000 service hours • 61G01 multi-function, illuminate all, outer segments, or middle segment

18" LENGTH

61E81 500 Lm, Frosted
61E91 500 Lm, Frosted 24 VOLT
61F01 500 Lm, Frosted, w/ Switch

48" LENGTH

61281 1500 Lm, Frosted
61G01 2100 Lm, Clear, Multifunction

Material: Polycarbonate/ Aluminum
Finish: White
Volts / Amps: 18" 12V / .6A; 24V / .3A
48" 12V / 1.2A
VMRS Code: 034-004-068

LED

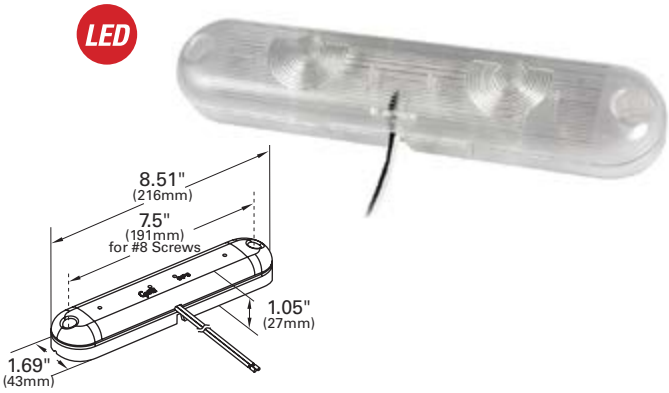

LED CABINET/COMPARTMENT DOME LAMP

Self-resetting cut-off switch to protect against excess current • Designed to operate in extreme cold temperatures down to -40°F • Encapsulant potting for total circuit board protection against moisture and corrosion • Optic lens design focuses light downward/upward based on orientation

61F81 Clear

Material: Polycarbonate
Regulations / Standards: SAE J575™
Finish: Clear
Volts / Amps: 12V / .35A
VMRS Code: 034-004-452

 © 2019 All Rights Reserved, Grote® Industries, Inc.

OVAL LED WHITELIGHT DOME LAMP

Grote® LEDs provide valuable light output with low amp draw
- Cost-effective LED lighting option is rated at 50,000 hours

61G31 Clear, Male Pin

Material: ABS / Acrylic
Standards: SAE J2139™
Finish: Clear
Volts / Amps: 12.8V / .6A
Bracket: (requires grommet or flange): 43362, 43952
Flange: 43220, 43223, 43222, 43723, 42153
Grommet: 92420, 92720
Pigtail: 67013, 66842, 66846, 67016
VMRS Code: 034-004-452

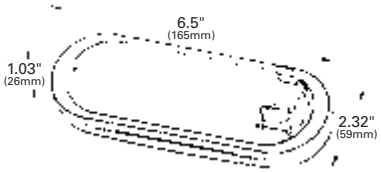

EUROSTYLE MAP & DOME LAMP

Three-way switch: map only, dome/map light, or off • Two options for wiring: either for dome to light or not to light, when door is open

61301 Clear

Material: Nylon / Polycarbonate
Finish: Black
Volts / Amps: Bulb: Dome - 561, 12 C.P.: 12 V / .97A; Bulb: Map - 1816, 3 C.P.: 12V / .33A
VMRS Code: 034-004-083

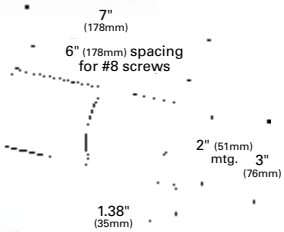

SQUARE DOME LAMP WITH SWITCH

Three-position switch enables variable intensity: low-6 CP, high-21 CP, or off
- Surface mount • Large enough to cover most existing holes

61221 Clear

Material: ABS/Polycarbonate
Finish: Clear
Volts / Amps: Bulb: 1016, 21/6 CP: 12V / 1.5A max
VMRS Code: 034-004-083

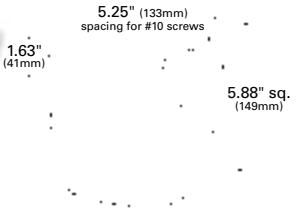

DOME LAMP WITH SWITCH

Durable polycarbonate lens • Integrated on/off toggle switch • Raised lens for maximum light dispersion • Comes with ground wire

61491-5 Clear RETAIL

Material: Steel / Polycarbonate
Finish: Clear
Volts / Amps: Bulb: 1156, 32 CP: 12V / 2.1A
VMRS Code: 034-004-083

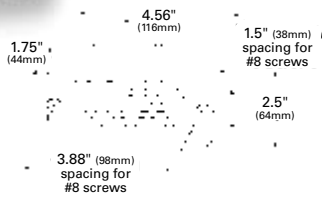

© 2019 All Rights Reserved, Grote® Industries, Inc.

LED

SMALL RECTANGULAR LED UTILITY LAMP

Long-life LED light source makes this lamp the perfect choice for difficult-to-reach mounting locations • Uses same UBS pigtails as incandescent for a quick Plug-and-Go® retrofit

60421 Clear

Material: Polycarbonate
Finish: Clear
Volts / Amps: 12V / .2A
Bracket: 43380, 43970, 43980
Pigtail: 66850, 67050, 67001, 66851, 66800, 66840
Grommet: 91380
VMRS Code: 034-004-068

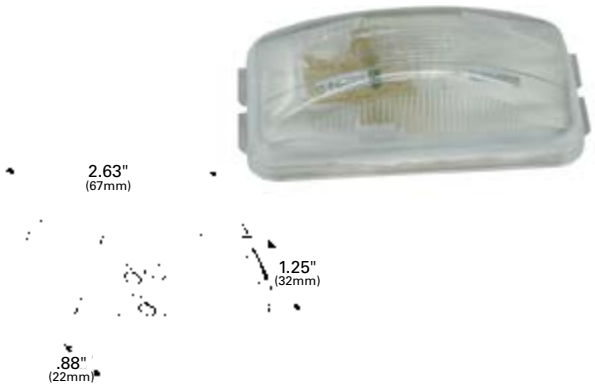

SMALL RECTANGULAR UTILITY LAMP

Sonically sealed lens • Single 15,000-hour bulb

60271 Clear

Material: Polycarbonate
Finish: Clear
Bulb: 2 CP
Volts / Amps: 12V / .33A
Bracket: 43380, 43970, 43980
Pigtail: 66850, 67050, 67001, 66851, 66800, 66840
Grommet: 91380
VMRS Code: 034-002-068

LED

RECTANGULAR LED UTILITY LAMP

Long-life LED light source makes this lamp the perfect choice for difficult-to-reach mounting locations • Uses same UBS pigtails as incandescent for a quick Plug-and-Go® retrofit • Hermetic lens-to-housing seal

60411 Clear

Material: Polycarbonate
Finish: Clear
Volts / Amps: 12V / .2A
Bracket: 43780, 43783, 43390, 43790, 43850
Pigtail: 66982, 66980, 66981
VMRS Code: 034-004-068

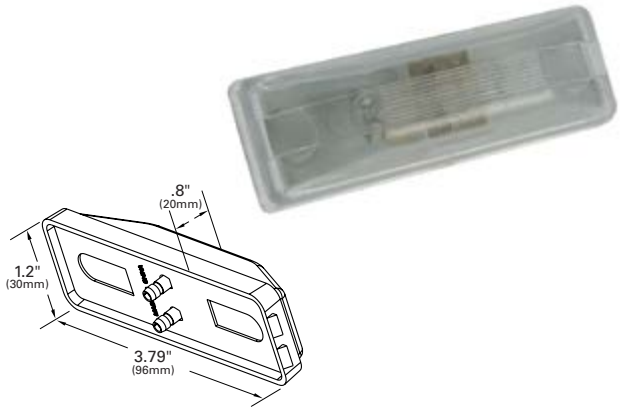

RECTANGULAR UTILITY LAMP

Sonically sealed, rectangular double-bulb lamp • Designed for narrow mounting applications • 15,000-hour bulbs

60301 Clear

Material: Polycarbonate
Finish: Clear
Bulb: 2 CP
Volts / Amps: 12V / .66A
Bracket: 43390, 43780, 43790, 43850, 43783
Pigtail: 66981, 66982
VMRS Code: 034-004-068

 © 2019 All Rights Reserved, Grote® Industries, Inc.

2" LED INTERIOR COURTESY LAMP

Bright, single LED provides ample light for tool boxes, cabinets, and other hard-to-light areas • Encapsulant potting for total circuit board protection against vibration and corrosion

60561 White

Material: Polycarbonate
Finish: Clear
Volts / Amps: 14V / .2A
Bracket: 43690, 43150, 43152, 43153, 43532
Grommet: 92120, 92150, 94100
Pigtail: 66851, 66850, 66840, 67001, 67050, 66801
VMRS Code: 034-004-068

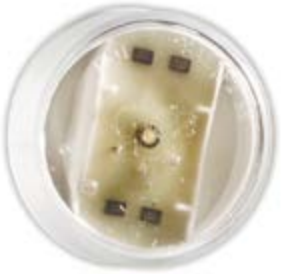

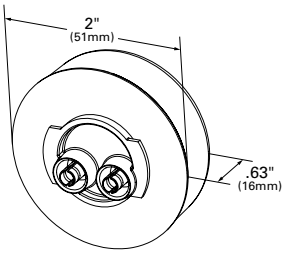

TWO-BULB SQUARE CORNER UTILITY LAMP

Ideal courtesy or dome lamp • Attached pigtail with two stainless steel grounds

46791 Clear

Material: Polypropylene / Polycarbonate
Finish: Clear
Bulb: 1893 (2), 2 CP
Volts / Amps: 12V / .66A
Pigtail: 67120
Lens: 91961
VMRS Code: 034-004-068

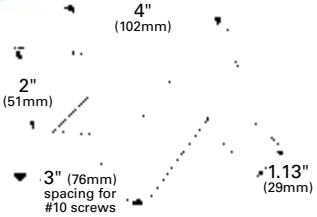

2½" ROUND UTILITY LAMP

Ideal for utility, courtesy or dome applications • Hermetic lens-to-housing seal • 15,000-hour bulb • Twist-on mounting

45811 Clear

Material: Polycarbonate
Finish: Clear
Bulb: 2 CP
Volts / Amps: 12V / .33A
Bracket: 43690, 43160, 43163, 43512, 43522
Grommet: 91880, 91890, 91400, 91410, 92070
Pigtail: 66851, 66850, 67001, 67050, 66801, 66800, 66840
VMRS Code: 034-004-068

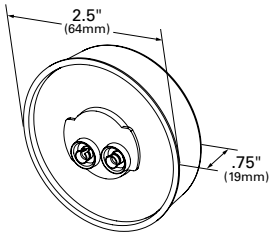

STEPWELL UTILITY LAMP

Rugged, heavy-duty design • Brilliant chrome finish • Easy to install • Includes foam mounting pad

60351 Clear

Material: Die-cast / Polycarbonate
Regulations / Standards: FMVSS 108 / SAE L
Finish: Chrome
Bulb: 906, 6 CP
Volts / Amps: 12V / .7A
VMRS Code: 034-002-122

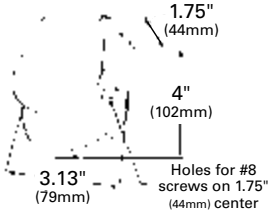

© 2019 All Rights Reserved, Grote® Industries, Inc.

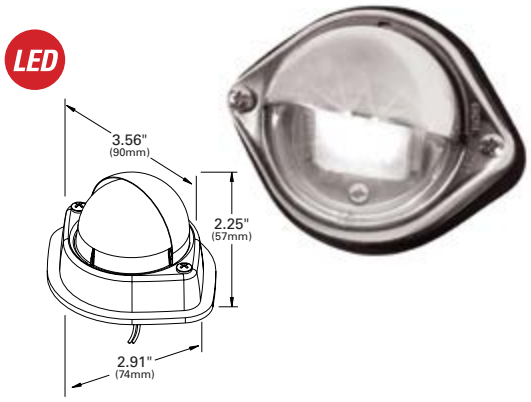

LED COURTESY STEPWELL LAMP

Same mounting as popular incandescent versions • Designed to integrate into existing bus electronic platforms • ADA-compliant

60571 White

Material: Stainless Steel / Polycarbonate
Finish: Stainless
Volts / Amps: 14V / .3A
Lens: 93201
VMRS Code: 034-004-256

COURTESY STEPWELL LAMP

Bright, polished stainless steel construction • High-heat and impact-resistant lens • Adjustable hood for directional lighting • Bulb replaceable • Mounting pad and screws included

60361 Clear

Material: Stainless Steel / Polycarbonate
Finish: Stainless
Bulb: 1142, 21 CP
Volts / Amps: 12V / 1.34A
VMRS Code: 034-004-122

MICRONOVA® DOT LED COURTESY STEPWELL LAMP

Durable one-piece LED lamp design • Hardwire with .180 slim-line UBS plug connections for maximum performance

60721 Lamp with Hooded Grommet

Material: Polycarbonate / PVC
Regulations / Standards: FMVSS 108 / SAE L
Finish: Clear/Black
Volts / Amps: 9-32V / .03A
Grommets: 94360
VMRS Code: 034-004-256

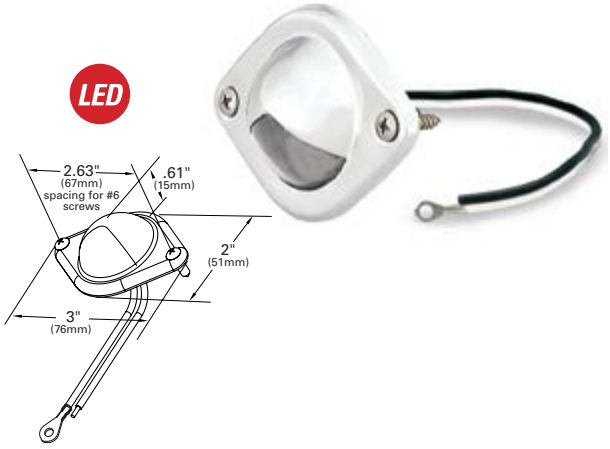

HI COUNT® LED COURTESY LAMP

Mounts using two #6 screws • Longer life than incandescent; uses LED technology to reduce maintenance costs

G6261 Chrome-Plated Steel
G6261-5 Chrome-Plated Steel RETAIL

Material: Chrome-Plated Steel
Finish: Chrome
Volts / Amps: 12V / .02A
VMRS Code: 034-004-068

 © 2019 All Rights Reserved, Grote® Industries, Inc.

COURTESY LAMP

Chrome-plated steel housing • Single-bulb unit similar to lamps on Chevrolet®/GM® vehicles

60251 Clear
60251-5 Clear RETAIL

Material: Steel
Finish: Chrome
Bulb: 67, 4 CP
Volts / Amps: 12V / .59A
VMRS Code: 034-004-068

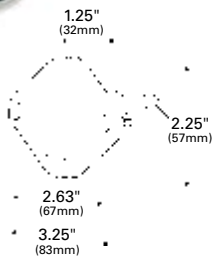

LED COMPACT COURTESY LAMP

Fits 1 1/4" hole in panels from 1/16" to 1/8" thick • Rubber-sealed spring and pigtail assembly • Translucent white plastic lens with chrome shade

G6121 Clear
G6121-5 Clear RETAIL

Material: Steel
Finish: Chrome
Volts / Amps: 12V / .02A
VMRS Code: 034-004-068

LED

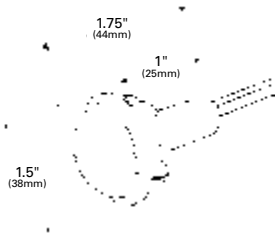

COMPACT COURTESY LAMP

Fits 1 1/4" hole in panels from 1/16" to 1/8" thick • Rubber-sealed spring and pigtail assembly • Translucent white plastic lens with chrome shade • Chassis ground

60101 Clear
60101-5 Clear RETAIL

Material: Steel
Finish: Chrome
Bulb: 67, 4 CP
Volts / Amps: 12V / .59A
Accessory: Socket Wire: 84-1003
VMRS Code: 034-004-068

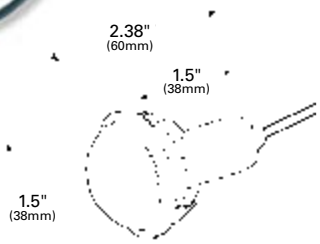

LED COURTESY LAMP

Illuminates instrument panel and compartments • Clear plastic lens

G6131 Clear
G6131-5 Clear RETAIL

Material: Steel
Finish: Chrome
Volts / Amps: 12V / .002A
VMRS Code: 034-004-068

LED

© 2019 All Rights Reserved, Grote® Industries, Inc.

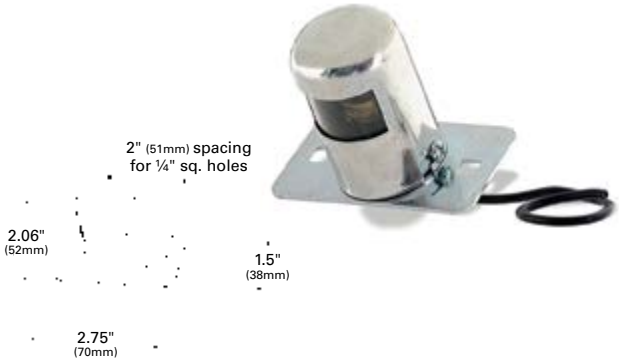

ECONOMY COURTESY LAMP

Illuminates instrument panel and compartments • Clear plastic lens • Chassis ground

60151 Clear
60151-5 Clear RETAIL

Material: Steel
Finish: Polished Chrome
Bulb: 67, 4 CP
Volts / Amps: 12V / .59A
Pigtail: 68080
VMRS Code: 034-004-068

LED

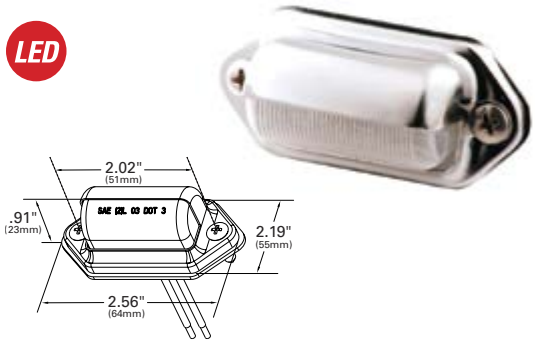

HI COUNT® INTERIOR/UTILITY LAMP

LED offering provides maximum lighting output in tight spaces • Low power consumption and heat production • Hooded guard to reduce glare

G6151 Clear
G6151-5 Clear RETAIL

Material: Steel / Polycarbonate
Finish: Chrome
Volts / Amps: 12V / .025A
VMRS Code: 034-004-068

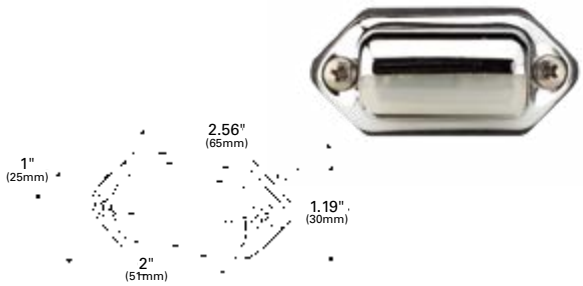

INTERIOR/UTILITY LAMP

Chrome-plated housing • Hooded guard to reduce glare • Separate ground wire

61501 Clear
61501-5 Clear RETAIL

Material: Brass / Polycarbonate
Finish: Chrome
Bulb: 194, 2 CP
Volts / Amps: 12V / .27A
VMRS Code: 034-004-068

LED

LED ROPE LIGHTING

Flexible rope lighting is perfect for compartments and tool boxes • 50' roll comes with 10 wire connectors, 50 mounting clips and 10 end caps • 1/2" diameter rope • LEDs spaced one per inch

60481 White

Finish: Clear
Volts / Amps: 12V / .07A per foot
VMRS Code: 034-004-068

 © 2019 All Rights Reserved, Grote® Industries, Inc.

AUTOMATIC ELECTRONIC DOME LIGHT SWITCH WITH TIMER

Reduces the overall number of components of an interior lighting system • Eliminates tapping into the air brake delivery system • Automatic shut down of circuit for no-fuss on/off • Allows for multiple, simple ground-sensing switches while maintaining the integrity of the interior lighting system • Timer is factory pre-set for 40 minutes on-time and can be manually shut off or automatically when the vehicle experiences forward/backward acceleration • Operates at -40C° to +85C° • Four-wire design • Designed to replace Grote® part number 44360

44440 Dome Lamp Switch

Material: Nylon / G.F., UL94HB / Polycarbonate
Standards: SAE J1455™, J2139™, IP65
Finish: Gray
Volts / Amps: 9–16V / 15A max load
VMRS Code: 034-004-014

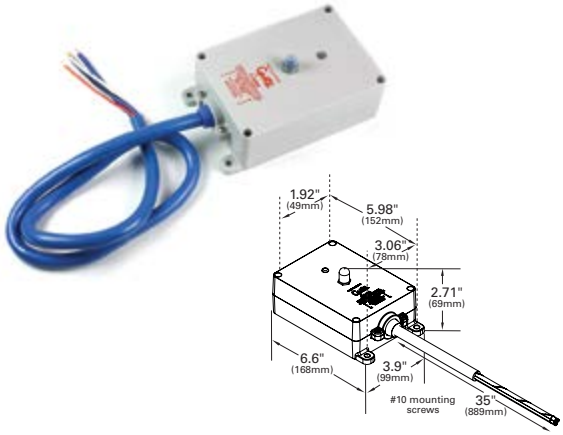

ELECTRONIC DOME LAMP SWITCH

Solid-state electronic circuitry • Impact resistant PVC construction • Sealed trigger switch • High current-switching capacity of 30 amps, not to exceed 15 operating amps • Wide voltage range: 9 to 16 volts • Three-wire design • Designed to replace Grote® part number 44240

44910 Full Feature, Surface Mount MULTI

Material: PVC
Standards: IP65
Finish: Gray
Volts / Amps: 9–14V / .9A max
Accessory: Automotive style 15A fuse
VMRS Code: 034-004-014

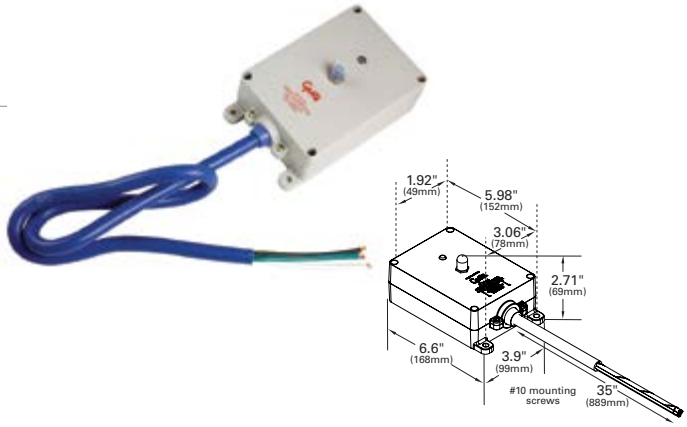

RECESSED MOMENTARY GROUND SWITCH

Simple switch to reset the timer function of standard "outside-the-trailer" switches • Recessed into the trailer wall to eliminate bumps and knock-offs • Easy to integrate into the current system • For use with 44360, 44440 and 44190 switches

44380 Switch

Material: ABS
Standards: SAE J575e™ 1970
Finish: White
Volts: .02V–30V (D.C)
VMRS Code: 034-004-093

ECONOMY FULL-FEATURE TIMER SWITCH

Solid-state, low profile design • Two-hour timer • Fully potted for protection against moisture • 5-amp, field-replaceable blade fuse

44242 Switch

Material: Polycarbonate
Finish: Gray
Volts: 10–14V
VMRS Code: 034-004-093

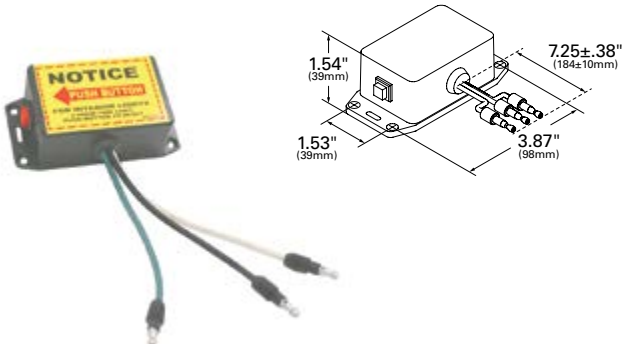

© 2019 All Rights Reserved, Grote® Industries, Inc.

FEMALE PIN CLEARANCE MARKER PIGTAILS

For more information on pigtail products see **Pigtails** section: page 254

SEALED MARKER LAMP PIGTAILS

DOUBLE SEAL:

67001	6" Long, Ring Terminal Ground, Blunt Cut Wire
66850	6" Long, Chassis Ground
66851	6" Long, Ground Return

SINGLE SEAL:

66801	6" Long, Ground Return
67050	6" Long, Ring Terminal Ground, Blunt Cut Wire
67050-5	6" Long, Ring Terminal Ground, Blunt Cut Wire RETAIL
66840	6" Long, Chassis Ground, Standard .180 Male
66800	6" Long, Chassis Ground, Slim-Line .180 Male

2 PIN, MALE PIN CLEARANCE MARKER PIGTAILS

CLEARANCE / MARKER PIGTAILS

66980	6" Long, Chassis Ground, Slim-Line .180 Male
66981	6" Long, Universal Replacement, Blunt Cut, Ring Terminal Grommet
66982	8" Long, Ground Return

PIGTAILS FOR 4" ROUND & 6" OVAL LAMPS

SINGLE FUNCTION TWO-WIRE PLUG-IN PIGTAILS FOR MALE PIN LAMPS

67013	11" Long, Chassis Ground, Blunt Clut Wire
66842	10" Long, Chassis Ground, Slim-Line .180 Male

SINGLE FUNCTION TWO-WIRE 90° PLUG-IN PIGTAILS FOR MALE PIN LAMPS

66846	10" Long, Chassis Ground, 90° Plug, Slim-Line .180 Male
67016	11" Long, Chassis Ground, 90° Plug, Blunt Cut Wires

TWO-WIRE PLUG-IN PIGTAILS FOR FEMALE-PIN LAMPS

STRAIGHT:

67010	11 1/2" Long, Chassis Ground, Blunt Cut
67011	10 1/4" Long, Chassis Ground, Standard .180 Male

90° PLUG:

67014	10" Long, Chassis Ground, Blunt Cut
67020	10" Long, Ground Return, Slim-Line .180 Male

 © 2019 All Rights Reserved, Grote® Industries, Inc.

PIGTAILS

For more information on pigtail products see **Pigtails** section: page 254

MARKER LAMP PIGTAIL

67120 7 3/4" Long, .180 Slim-Line Male

67120

REPLACEMENT LAMP SOCKET PIGTAILS

68170 9 1/2" Long Single Contact

68170

3" LAMP MOUNTING

For more information on mounting products see **Mounting Options** section: page 264

GROMMET FOR SMALL RECTANGULAR LAMPS

91380 Black

Material: PVC
Finish: Black

BRACKET KITS FOR SMALL RECTANGULAR LAMPS

43970	Gray (+ 67050 pigtail)
43980	Chrome-Plated (+ 67050 pigtail)

Material: Polycarbonate/ABS
Finish: Chrome/Gray

HEADER-MOUNT BRACKET FOR SMALL RECTANGULAR LAMPS

KITS:

43380 White (42141 + 67050)

Material: Polycarbonate
Finish: White

3" – 5" LAMP MOUNTING

MOUNTING BRACKET FOR LARGE RECTANGULAR LAMPS

43780	Gray Bracket
43783	Chrome-Plated Bracket, ABS

KITS:

43390	Gray (43780 + 66981)
43790	Gray (43780 + 66980)

Material: Polycarbonate/ABS
Finish: Gray/Chrome

LOW PROFILE MOUNTING BRACKET

43850 Gray

Material: Polycarbonate
Finish: Gray

© 2019 All Rights Reserved, Grote® Industries, Inc.

2" & 2½" LAMP MOUNTING

For more information on mounting products see **Mounting Options** section: page 264

RECESSED MOUNTING GROMMET FOR 2" ROUND LAMPS

92120 Open Grommet
92150 Closed Back Grommet

KITS:

94100 Open Grommet (92120 + 67050)

Material: PVC
Finish: Black

RECESSED MOUNTING GROMMET FOR 2½" ROUND LAMPS

91400 Open Grommet
92070 Closed Back Grommet

Material: PVC
Finish: Black

RECESSED MOUNTING GROMMET FOR 2½" ROUND LAMPS

91410 Open Grommet

Material: PVC
Finish: Black

45° ANGLED BEVELED-EDGE RECESSED MOUNTING GROMMET FOR 2½" ROUND LAMPS

91880 Open Grommet

Material: PVC
Finish: Black

SURFACE MOUNT GROMMET FOR 2½" ROUND LAMPS

91890 Open Grommet

Material: PVC
Finish: Black

THEFT-RESISTANT MOUNTING FLANGE FOR 2" ROUND LAMPS

43150 Gray, Polycarbonate
43152 Black, Polycarbonate
43153 Chrome-Plated, ABS

Material: Polycarbonate/ABS
Finish: Gray/Black/Chrome

THEFT-RESISTANT MOUNTING FLANGE FOR 2½" ROUND LAMPS

43160 Gray, Polycarbonate
43163 Chrome-Plated, ABS

Material: Polycarbonate/ABS
Finish: Gray/Chrome

90° ANGLE MOUNTING BRACKET FOR 2" AND 2½" ROUND LAMPS

FOR 2 1/2" LAMPS:

43512 Accommodates 94010, 91400, 92070 Grommets (2 25/32" Hole)
43522 Accommodates 94000, 91410 Grommets (3" Hole)

FOR 2" LAMPS:

43532 Accommodates 94100, 92120, and 92150 Grommets (2 5/16" Hole)

Material: Steel
Finish: Black Enamel

TWIST-IN SURFACE MOUNT BRACKET FOR 2" AND 2½" ROUND LAMPS

43690 Gray

Material: Polycarbonate
Finish: Gray

MICRONOVA® LAMP MOUNTING

HOODED MICRONOVA® DOT GROMMET

94360 Black

Material: PVC
Finish: Black

 © 2019 All Rights Reserved, Grote® Industries, Inc.

4" LAMP MOUNTING

For more information on mounting products see **Mounting Options** section: page 264

RECESSED MOUNTING GROMMET FOR 4" ROUND LAMPS

91740 Grommet

Material: PVC
Finish: Black

ANGLED MOUNTING BRACKET FOR 4" ROUND LAMPS

43572 Black, 90° angle bracket

Material: Steel
Finish: Black Powder-Coated
Grommet: 91740

THEFT-RESISTANT MOUNTING FLANGE FOR 4" ROUND LAMPS

92510	White, Polycarbonate
92512	Black, Polycarbonate
92513	Chrome-Plated, ABS
92511	Gray, Polycarbonate
43253	Stainless Steel

Material: Polycarbonate; Stainless Steel; ABS

6" LAMP MOUNTING

RECESSED MOUNTING GROMMET FOR 6" OVAL LAMPS

92420	Open Grommet
92720	Closed Back Grommet

Material: PVC
Finish: Black

ANGLED MOUNTING BRACKET FOR 6" OVAL LAMPS

43362 Black, 90° angle bracket

Material: Steel
Finish: Black
Grommet: 92420

"Z" MOUNTING BRACKET FOR 6" OVAL LAMPS

43952 Black

Material: Steel
Finish: Black
Grommet: 92420

REPLACEMENT LENSES

LENS MODEL NUMBER	FITS LAMP
90401	61031
	61861
	61991
	61871
	61931
91961	46791

90401

91961

GM® is a registered trademark of General Motors LLC; Chevrolet® is a registered trademark of General Motors LLC. Hyundia® is a registered trademark of HYUNDAI MOTOR COMPANY; Tyco® is a registered trademark of Tyco Internation Services GmbH LIMITED LIABILITY COMPANY SWITZERLAND;

All product and company names are trademarks™ or registered® trademarks of their respective holders. Use of them does not imply any affiliation with or endorsement by them.

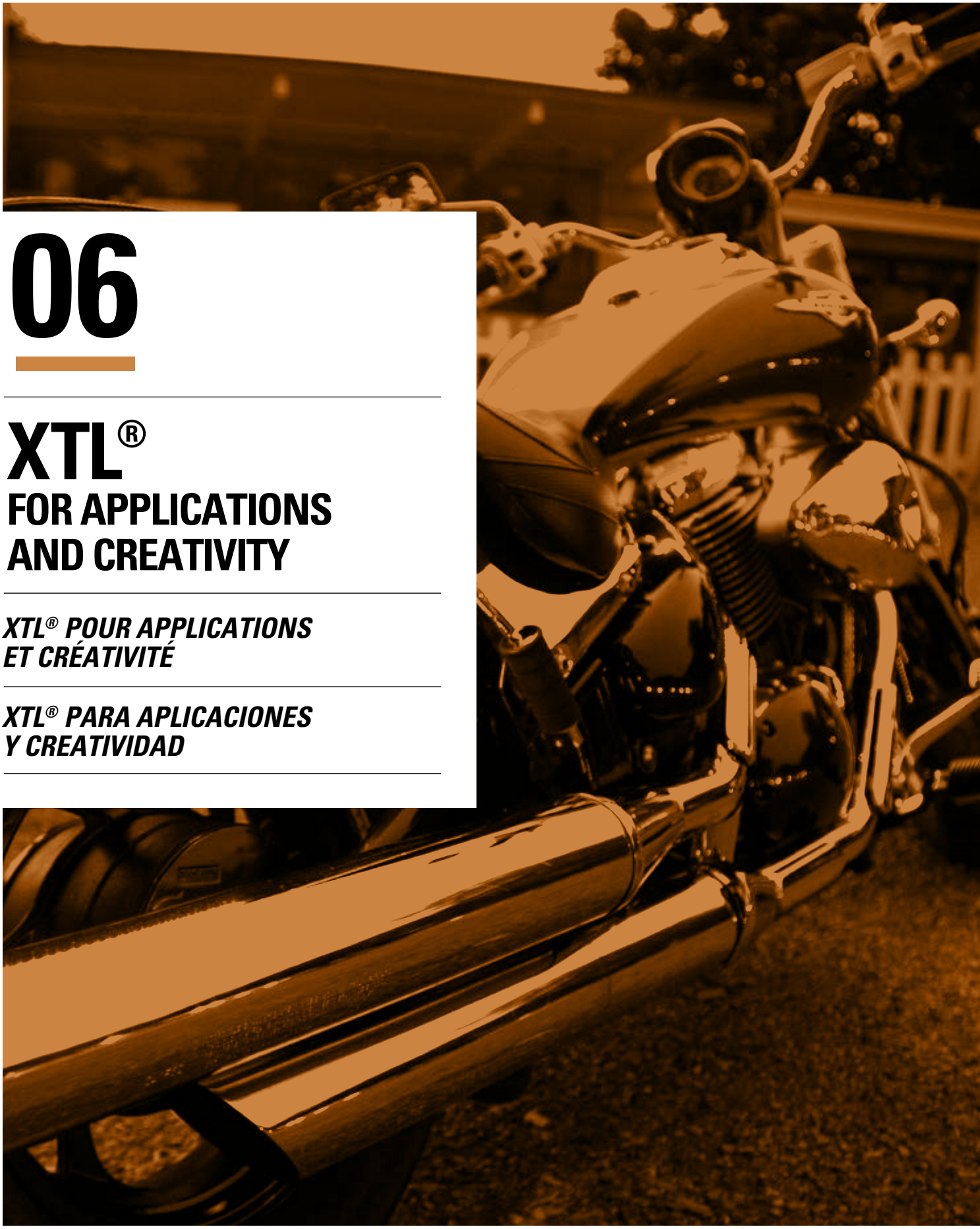

06

XTL®
FOR APPLICATIONS AND CREATIVITY

XTL® POUR APPLICATIONS ET CRÉATIVITÉ

XTL® PARA APLICACIONES Y CREATIVIDAD

 © 2019 All Rights Reserved, Grote® Industries, Inc.

XTL® TRUCK BUNDLES

FEATURES & BENEFITS

- Use the XTL® Xtreme Truck Bundle to light up your pick-up truck, SUV, RV, utility trailer—any place where light is needed and power is not readily available
- Connected to a battery box, XTL® will provide light for at least 35 hours on a fresh set of batteries
- Expandable kit allows the user to connect to 12V power and add three (3) strips of different lengths and light output
- Grote® UBS wire harness uses sealed connections and includes a professional installation kit

VISIT GROTE.COM/XTL
FOR COMPLETE PRODUCT LINE INFORMATION

© 2019 All Rights Reserved, Grote® Industries, Inc.

XTL® FOR ATV AND UTV

XTL® REAR VISIBILITY KIT

Add an additional layer of visibility with the durable, flexible XTL® strip on your UTV or Side-by-Side. This XTL® kit features the bright, red strip, OEM mounting tape and wire harness.

XTL® TASK LIGHT KIT

Off-road or on the jobsite, easy-to-install and ultra-durable Grote® XTL® enables you to put light anywhere you need it.

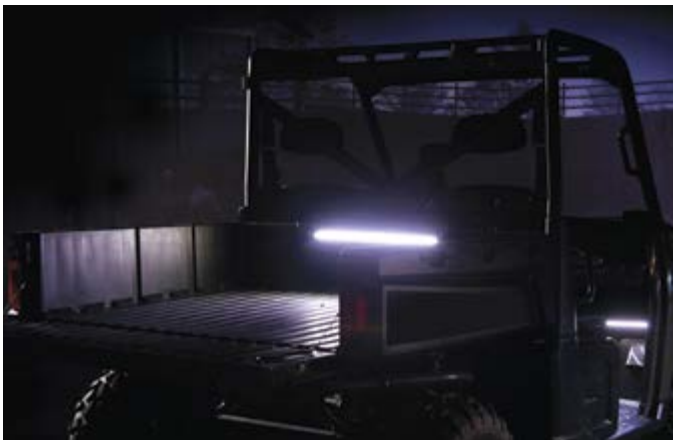

 © 2019 All Rights Reserved, Grote® Industries, Inc.

XTL® EXTRUSIONS

FEATURES & BENEFITS

- Provides ability to install extrusion at 90°angle to be able to aim light at a 45° angle
- Opaque lens provides a smooth, non-glaring light output
- Extrusions protect XTL® Strip Lighting from impacts
- Snap-in or slide-in lens
- Mounting clips supplied separately in hardware bag
- Recommendation: use 2 clips on 288mm extrusion, 3 clips on 488mm extrusion, 4 clips on 576mm extrusion, and 5 clips on 864mm extrusion
- 18-8 stainless-steel Phillips flathead screws required for installation (not included)

Opaque Lens Angle

Opaque Lens Flat

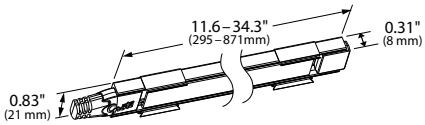

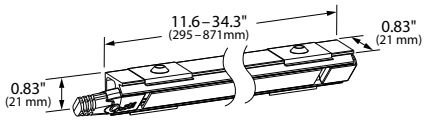

VISIT GROTE.COM/XTL
FOR COMPLETE PRODUCT LINE INFORMATION

© 2019 All Rights Reserved, Grote® Industries, Inc.

XTL® COLORED AND WHITE STRIPS

FEATURES & BENEFITS

- Made in the U.S.A.
- Long-life LED performance and reliability
- Strips are less than 2 mm thick
- Lightweight
- Flexible – can bend to a 0.5" radius and conform to compound curves
- Concussion- and abrasion-resistant
- 3-year warranty
- Comes with 3M® VHB tape for long-term (10-year-plus) adhesion

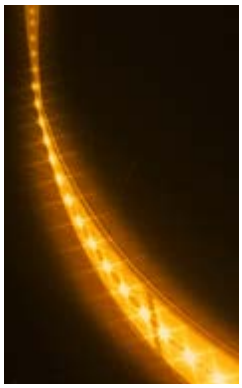

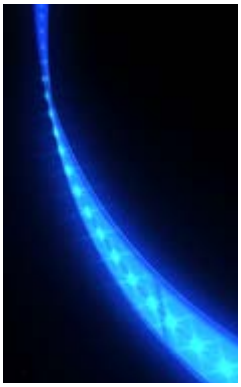
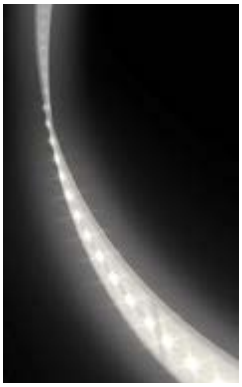

3M® is a registered trademark of 3M Company;

All product and company names are trademarks™ or registered® trademarks of their respective holders. Use of them does not imply any affiliation with or endorsement by them.

 © 2019 All Rights Reserved, Grote® Industries, Inc.

REVOLUTIONARY LED AUXILIARY VEHICLE LIGHTING

Create special lighting effects for virtually any vehicle with XTL®, a family of flexible, lightweight, ultra-thin LED lighting strips. Available in a range of colors, durable XTL® strips can twist and conform to most surfaces to provide direct or indirect light.

VISIT GROTE.COM/XTL FOR COMPLETE PRODUCT LINE INFORMATION

© 2019 All Rights Reserved, Grote® Industries, Inc.

07

FORWARD LIGHTING

PHARES UTILITAIRES

FAROS DELANTEROS

 © 2019 All Rights Reserved, Grote® Industries, Inc.

7" LED SEALED BEAM HEADLAMP

LED

FEATURES & BENEFITS

- Designed for a standard H4 connection, no additional wiring needed for vehicles featuring standard H4 wiring
- Long-lasting LEDs and impact-resistant polycarbonate lens outperform OEM halogen and incandescent bulbs in longevity, light output and pattern
- Heated Lens (64H71-5) is designed to melt snow/ice in 15-20 minutes

90941-5

64H71-5

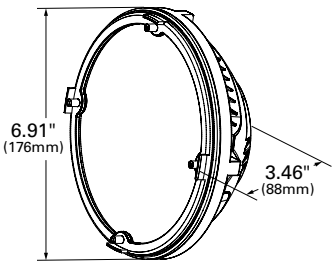

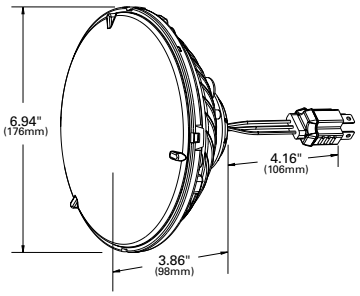

Part Number	FMVSS/SAE	Product Description	Low Beam Watt	High Beam Watt	Voltage (V)	Amperage (A)
90941-5 RETAIL MULTI	HL13	Grote® 7" LED Head Lamp	15	27	9–32V	1.4A at 12.8 low 2.13A at 12.8 low
64H71-5 RETAIL MULTI	HB: UB3 LB: LB3V	7" Round Heated LED Head Lamp	15 42 (heated)	20 48 (heated)	12–30V	2.91A at 12V 1.16A at 30V 7.5A at 12V (Heat Function Active)

Accessories

Part Number	Description
68630	Self-addressable pigtail for vehicles with non-standard H4 wiring
68670	Constant power harness (Anti-flicker)

All figures listed are based on nominal voltage

Materials	Certifications
Housing: anodized aluminum, Lens UV-coated polycarbonate	7" lamp meets DOT, FMVSS, SAE standards for 2D-1

Interchange

Part Number	Replaces Halogen Lamp
90941-5, 64H71-5	H6024

VMRS Code: 034-001-151

© 2019 All Rights Reserved, Grote® Industries, Inc.

LED 5"X7" LED SEALED BEAM HEADLAMP

FEATURES & BENEFITS

- Designed for a standard H4 connection, no additional wiring needed for vehicles featuring standard H4 wiring
- Long-lasting LEDs and impact-resistant polycarbonate lens outperform OEM halogen and incandescent bulbs in longevity, light output and pattern
- Heated Lens (64H81-5) is designed to melt snow/ice in 15-20 minutes

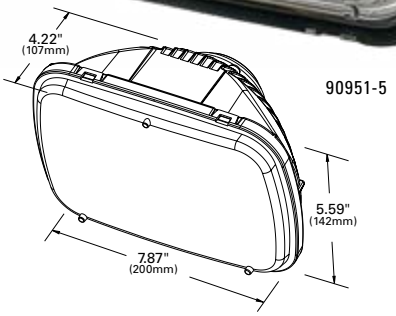

90951-5

64H81-5 - Heated

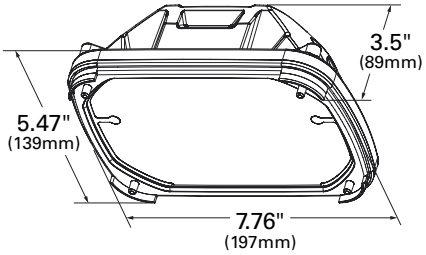

Part Number	FMVSS/SAE	Product Description	Low Beam Watt	High Beam Watt	Voltage (V)	Amperage (A)
90951-5 RETAIL MULTI	HL13	Grote® 5"x7" LED Head Lamp	21	33	9–32V	1.59A at 12.8 low 2.54A at 12.8 high
64H81-5 RETAIL MULTI	HB: UB3 LB: LB3V	Grote® 5"x7" Heated LED Head Lamp	15 42 (Heated)	20 48 (Heated)	12–30V	2.91A at 12V H+L 7.5A at 12V H+L (Heat Function Active)

All figures listed are based on nominal voltage

Accessories

Part Number	Description
68630	Self-addressable pigtail for vehicles with non-standard H4 wiring
68670	Constant power harness (Anti-flicker)

Interchange

Part Number	Replaces Halogen Lamp
90951-5	H6024, 2B-1

VMRS Code: 034-001-151

Materials	Certifications
Housing: anodized aluminum, Lens UV-coated polycarbonate	5"x7" lamp meets DOT, FMVSS, SAE standards for 2B-1

 © 2019 All Rights Reserved, Grote® Industries, Inc.

4"X 6" LED SEALED BEAM HEADLAMP

LED

FEATURES & BENEFITS

- Designed for a standard H4 connection, no additional wiring needed for vehicles featuring standard H4 wiring
- Long-lasting LEDs and impact-resistant polycarbonate lens outperform OEM halogen and incandescent bulbs in longevity, light output and pattern
- Heated lens versions (64J61-5 and 64J71-5) are designed to melt snow and ice in 15-20 minutes

64J71-5

64J61-5

94401-5

94411-5

94421-5

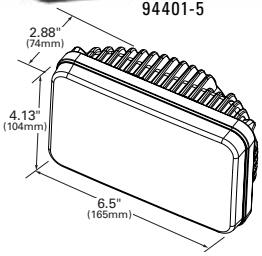

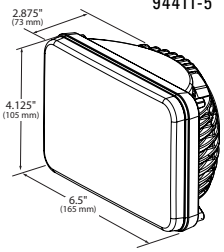

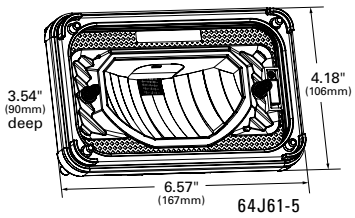

64J61-5

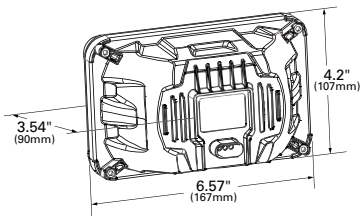

64J71-5

Part Number	FMVSS/SAE	Product Description	Low Beam Watt	High Beam Watt	Voltage (V)	Amperage (A)
94401-5 RETAIL MULTI	HL 17	Grote® 4"x6" LED Headlamp Combination	18.84 at 12V 18.84 at 24V	18.84 at 12V 18.84 at 24V	9–32	1.57A at 12V 0.77A at 24V
94411-5 RETAIL MULTI	HL 16	Grote® 4"x6" LED Headlamp High Beam	N/A	17.16 at 12V 16.08 at 24V	9–32	1.43A at 12V 0.67A at 24V
94421-5 RETAIL MULTI	HL 16	Grote® 4"x6" LED Headlamp Low Beam	13.08 at 12V 12.72 at 24V	N/A	9–32	1.09A at 12V 0.53A at 12V
64J61-5 RETAIL MULTI	LB1V	Grote® 4"x6" Heated LED Headlamp, Low Beam	20/35	N/A	12–30	1.67A at 12V 2.91A at 12V (Heat Function Active)
64J71-5 RETAIL MULTI	UB1	Grote® 4"x6" Heated LED Headlamp, High Beam	N/A	12/35	12–30	1A at 12V 2.91A at 12V (Heat Function Active)

Accessories

Part Number	Description
68630	Self-addressable pigtail for vehicles with non-standard H4 wiring
68670	Constant power harness (Anti-flicker)

Materials	Certifications
Housing: anodized aluminum, Lens UV-coated polycarbonate	4"x6" lamps meet DOT, FMVSS 571.108

Interchange

Part Number	Replaces Halogen Lamp
94401-5, 94411-5, 94421-5	H5062, 2A-1, 1A-1

VMRS Code: 034-001-151

All figures listed are based on nominal voltage

© 2019 All Rights Reserved, Grote® Industries, Inc.

LED HEATED SNOW PLOW LAMPS

Integrated thermal circuit senses ambient temperature to activate the heating element • Will melt snow and ice in 15-20 minutes

84661-4 Heated Lens Right-Hand and Left-Hand Kit RETAIL MULTI
84631-5 Heated Lens High/Low Beam Head Light, LH RETAIL MULTI
84641-5 Heated Lens High/Low Beam Head Light, RH RETAIL MULTI

Material: Lens: Glass; Housing: Die-Cast Aluminum
Regulations / Standards: FMVSS 108 / HB - SAE UB3; LB - SAE LB3V, IP67
Volts / Amps: 12V–30V;
3.5A at 12V High + Low
8.34A at 12V Heated High + Low
2.5A at 30V High + Low
3.34A at 30V Heated High + Low
Low Beam 22/40W (Heated)
High Beam 44/60W (Heated)
VMRS Code: 034-001-074

64291-4

PER-LUX® SNOWPLOW LAMPS

Resilient, polycarbonate housing and halogen sealed beam withstands hours of use at sub-zero temperatures • Features integrated parking and turn signal lights • Rubber shock mount and center mounting stud absorbs road shock • Optional 5-way Packard® Connector

SEALED BEAM:

64261-4 Pair Pack
64241 Left-hand Side
64251 Right-hand Side

SEALED BEAM WITH CONNECTOR:

64291-4 Pair Pack

Material: Polycarbonate
Regulations / Standards: FMVSS 108 / SAE H, I2, P
Finish: Black
Volts / Amps: Bulb H6545, Major - 65 Watt, 40,000 C.P./Minor - 45 Watt, 25,000 CP: 12V / 5.0/3.5A
Bulb 1157, 32/3 CP: 12V / 2.1/.59A
Pigtail: 68680 (64291-4)
Lens: Yellow 90483
VMRS Code: 034-001-074

 © 2019 All Rights Reserved, Grote® Industries, Inc.

SNOWPLOW LAMP KIT WITH UNIVERSAL WIRING HARNESS

Integrated turn signal/parking lamp lens • Vibration-dampening mounting system prolongs bulb life • Kit includes left and right side lamps, heavy-duty selector switch, wiring connectors, mounting hardware, and easy installation instructions

63381 Left-Hand Side
63391 Right-Hand Side
63451-4 Pair Pack

Material: Polycarbonate
Regulations / Standards: FMVSS 108 / SAE H, I2, P
Finish: Black
Volts / Amps: Bulb H6054, Major - 65 Watt/Minor - 35 Watt; 12V / 5/2.7A
Bulb: 1157, 32/2 CP: 12V / 2.1/.59A
Bulb: 1156, 32 CP: 12V / 2.1A
VMRS Code: 034-001-074

LED COMBINATION HEAD LAMPS

LED

Integrated DT connector (pigtail included) • Includes high, low, turn, and parking light integrated rear facing turn

84651-4 Combination Right Hand and Left Hand Kit RETAIL MULTI
84611-5 High/Low Beam Headlight, LH RETAIL MULTI
84621-5 High/Low Beam Headlight, RH RETAIL MULTI

Material: Lens: Ploycarbonate; Housing Die-Cast Aluminum
Regulations / Standards: FMVSS 108 / HB - SAE UB3; LB - SAE LB3V, IP67
Volts / Amps: 12V–36V;
3.83A at 12V, 1.27A at 36V
Low Beam 14W / High Beam 32W
VMRS Code: 034-001-074

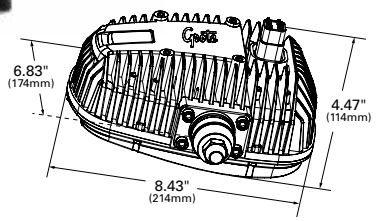

LED FOG LAMPS

LED

64H51-5

64H61-5

SAE J583™ compliant LED headlamps • Integrated DT connector harness included with kits • Two options for mounting flexibility, bracket mount or bezel flush mount

64H51-4 2 Each 64H51-5 Bracket Mount Fog Lamps RETAIL FOG MULTI
64H51-5 Bracket Mount LED Fog Lamp RETAIL FOG MULTI
64H61-4 2 Each 64H61-5 Bezel Mount LED Fog Lamps RETAIL FOG MULTI
64H61-5 Bezel Mount LED Fog Lamp RETAIL FOG MULTI

Material: Lens: Polycarbonate; Housing: Die-Cast Aluminum; Bracket: Stainless Steel
Regulations / Standards: FMVSS 108 / SAE J583™, F
Volts / Amps: 12V–36V; 1.42A at 12V, .47 at 36V
Accessory: Canbus Adapter Harness: 68650
Fog Lamp Vehicle Harness: 68660
VMRS Code: 034-001-012

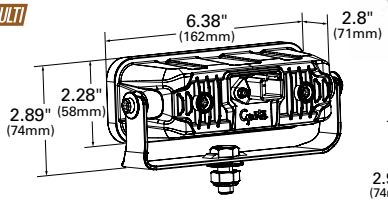

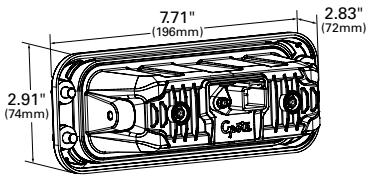

© 2019 All Rights Reserved, Grote® Industries, Inc.

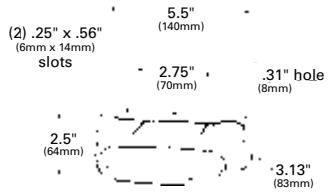

SLIM-LINE HALOGEN FOG LIGHTS

Housing made of die-cast aluminum • Ion-coated lens • Kit includes lamps, switch, wiring, and instructions • Not compliant for FMCSA 393.24(b) applications

64371-5 Clear, Fog Lamp Kit FOG RETAIL

Material: Die-Cast Aluminum
Regulations / Standards: FMVSS 108 / SAE F
Finish: Black
Volts / Amps: 12V / 4.7A
Bulb: H3, 55 Watt, 121 CP
Accessory: Bulb: 90971-5
VMRS Code: 034-001-012

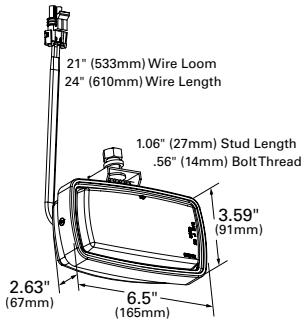

HALOGEN FOG LAMP

Glass lens resists hazing • Aluminized reflector for increased brightness • Black powder-coated hardware • Industry-standard electrical connector • Watertight design on the front of the lamp • Meets FMSCA 393.25 (b)

63531 Black FOG

Material: Glass / Plastic Housing
Regulations / Standards: FMVSS 108 / SAE F
Finish: Black
Bulb: H3, 55 Watt, 121 CP
Volts / Amps: 12V / 4.7A
VMRS Code: 034-001-012

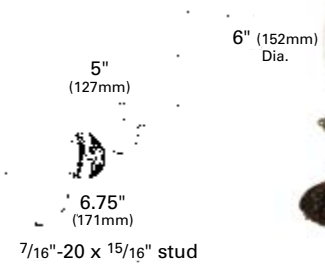

PER-LUX® 200 SERIES FOG AND DRIVING LAMPS

Pair Packs include wiring kits • All lamps come with swivel mount

HALOGEN:

02001-4 Clear, Fog / Driving Lamp, Swivel Mount, Pair Pack FOG

Material: Stainless Steel
Finish: Stainless
Bulb: H7621-1, 20,000 CP
Volts / Amps: 12V / 3.9A; 50 Watt
Lens: Clear Glass 09561
VMRS Code: 034-001-012

 © 2019 All Rights Reserved, Grote® Industries, Inc.

PER-LUX® 500 SERIES FOG AND DRIVING LAMPS

Pair packs include wiring kits • All lamps come with swivel mount
• Fog lamp beam pattern pierces through fog, rain, snow, or dust effectively, focused ahead and low to the road, and giving a side-to-side as well as forward illumination

HALOGEN:

05001-5 All-Weather Louvered, H9421, Pair Pack, Stainless Steel RETAIL
05301-5 All-Weather Louvered, H9421, Pair Pack, Powder Steel RETAIL
05041-5 Driving Lights, H9420, Pair Pack, Stainless Steel RETAIL
05051-5 Fog Lamps, H9415, Pair Pack, Stainless Steel FOG RETAIL

Material: Stainless Steel
Finish: Stainless / Powder Coat
Volts / Amps: Bulb: H9421 - 14,000 CP: 12V / 3.9A; 50 Watt
Bulb: H9420 - 47,000 CP: 12V / 3.9A; 50 Watt
Bulb: H9415 - 12,000 CP: 12V / 2.9A; 37.5 Watt
Lens: Clear: Glass 09681
Sealed Beam: All-Weather, Halogen, Sealed Beam Clear H9421
Fog Lamp, Halogen, Sealed Beam Clear H9415
VMRS Code: 034-001-012

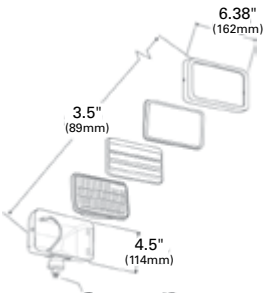

05041-5

PER-LUX® 600 SERIES FOG AND DRIVING LAMPS

Louvers direct the beam low to the road so reflected glare from fog, rain or snow is safely avoided • Pierces 100 feet through the densest fog
• Rugged stainless steel housing • Pair packs come with wiring kits
• Meets FMCSA 393.25(b) applications (except 06001-4)

INCANDESCENT

06021-4 Clear, All-Weather Lamp, Swivel Mount, Pair Pack FOG

HALOGEN:

06001-4 Clear, All-Weather Lamp, Swivel Mount, Pair Pack
06201 Clear, All-Weather Lamp, Swivel Mount

Material: Stainless Steel
Finish: Stainless
Volts / Amps: Bulb: #H7921-1 - 23,900 CP 12V / 3.9A; 50 Watt
Bulb: #4921-1 - 25,000 CP: 12V / 7.7A; 100 Watt
Accessory: Black Louver 09802
Lens: Clear: Glass 09781; Yellow, Glass 09793
Sealed Beam: Clear, All-Weather, Incandescent 4921-1;
Clear, All-Weather, Halogen 6006H
VMRS Code: 034-001-012

© 2019 All Rights Reserved, Grote® Industries, Inc.

PER-LUX® 700 SERIES FOG AND DRIVING LAMPS

Fog lamp beam pattern pierces through fog, rain, snow or dust effectively, focused ahead and low to the road giving side-to-side as well as forward illumination • Rugged stainless steel housing • Meets FMCSA 393.25(b)

INCANDESCENT:

07401 Clear, Fog Lamp, Rigid Mount FOG

Material: Stainless Steel
Regulations / Standards: Street Legal
Finish: Stainless
Volts / Amps: Bulb #4912-1, 14,000 CP: 12V / 3.9A; 50 Watt
Bulb #H7935-1 - 175,000 CP: 12V / 3.9A; 50 Watt
Bulb #H7921-1 - 23,900 CP: 12V / 3.9A; 50 Watt
Sealed Beam: Clear, Fog, Incandescent 4912-1; Clear, Spot, Halogen H7935-1
VMRS Code: 034-001-012

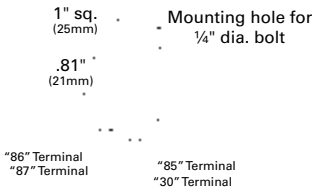

FOG AND DRIVING LAMP RELAY

30-Amp relay • Guards against arcing and overloads

44840-5 RETAIL

Volts / Amps: 12V / 30A max
VMRS Code: 034-003-018

REPLACEMENT 12-VOLT HALOGEN BULBS

Replacement bulb for auxiliary lights

90971-5 55 Watt, Spade Terminal RETAIL

Bulb: 90971-5 - H3, 55 Watt, 121 CP
Volts / Amps: 12V / 4.7A
VMRS Code: 034-004-019

REPLACEMENT 24-VOLT HALOGEN BULBS

91051 70 Watt, Spade Terminal 24 VOLT

Volts / Amps: 24V / 2.7A
VMRS Code: 034-004-019

Packard® is a registered trademark of DELPHI TECHNOLOGIES, INC.

All product and company names are trademarks™ or registered® trademarks of their respective holders. Use of them does not imply any affiliation with or endorsement by them.

VISIT GROTE.COM TO GET THE MOST UP-TO-DATE PRODUCT INFORMATION

Whether you prefer desktop, tablet, or mobile, ***GROTE.COM*** puts all the Grote® lighting and electrical accessory information at your fingertips, wherever you may be.

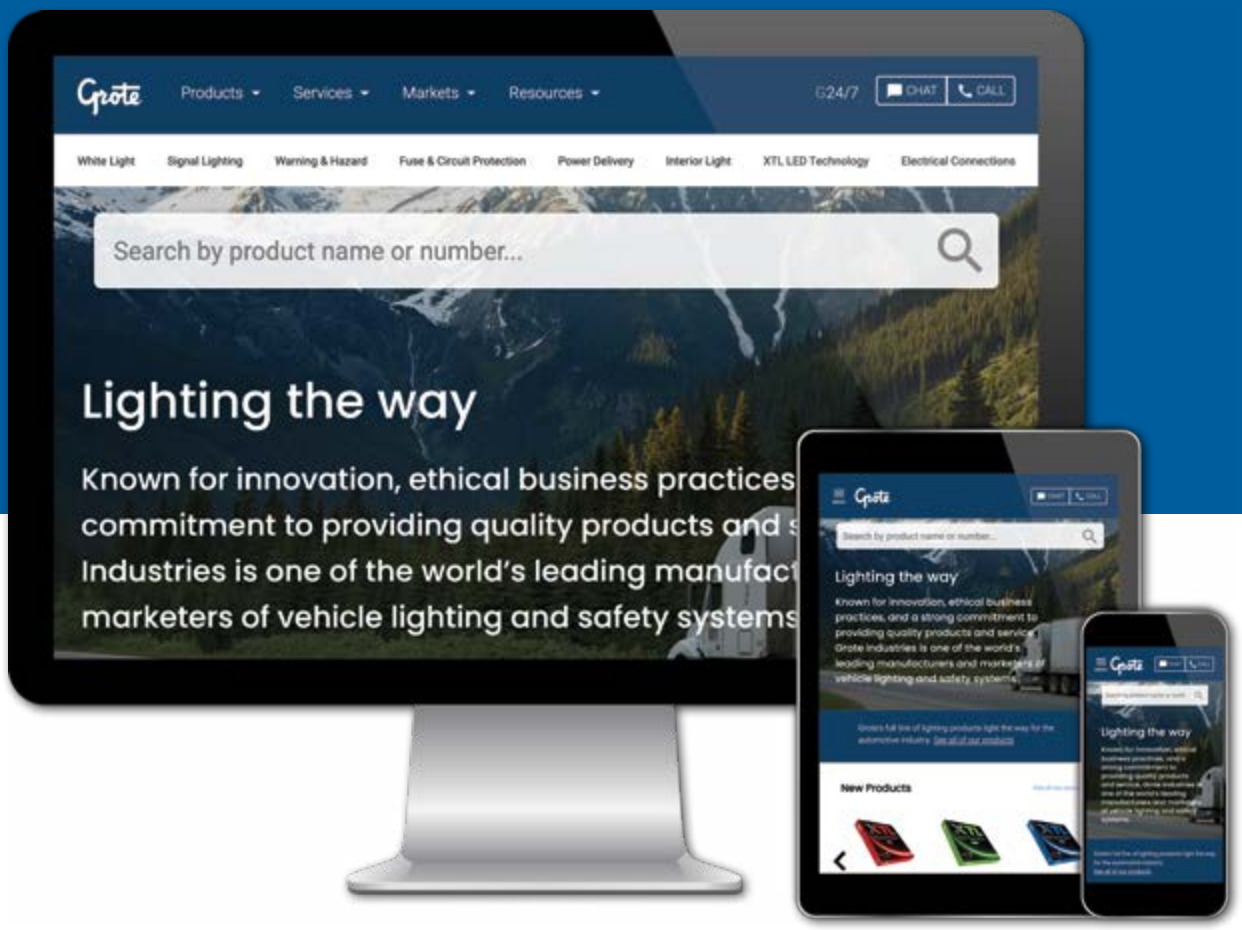

GROTE.COM –THE ULTIMATE REFERENCE!

- ***HIGH-RESOLUTION IMAGERY***
- ***UP-TO-DATE STATS AND INFORMATION***
- ***UNIQUE 360° VIEWS OF MANY PRODUCTS***
- ***LATEST PRODUCT RELEASES***

© 2019 All Rights Reserved, Grote® Industries, Inc.

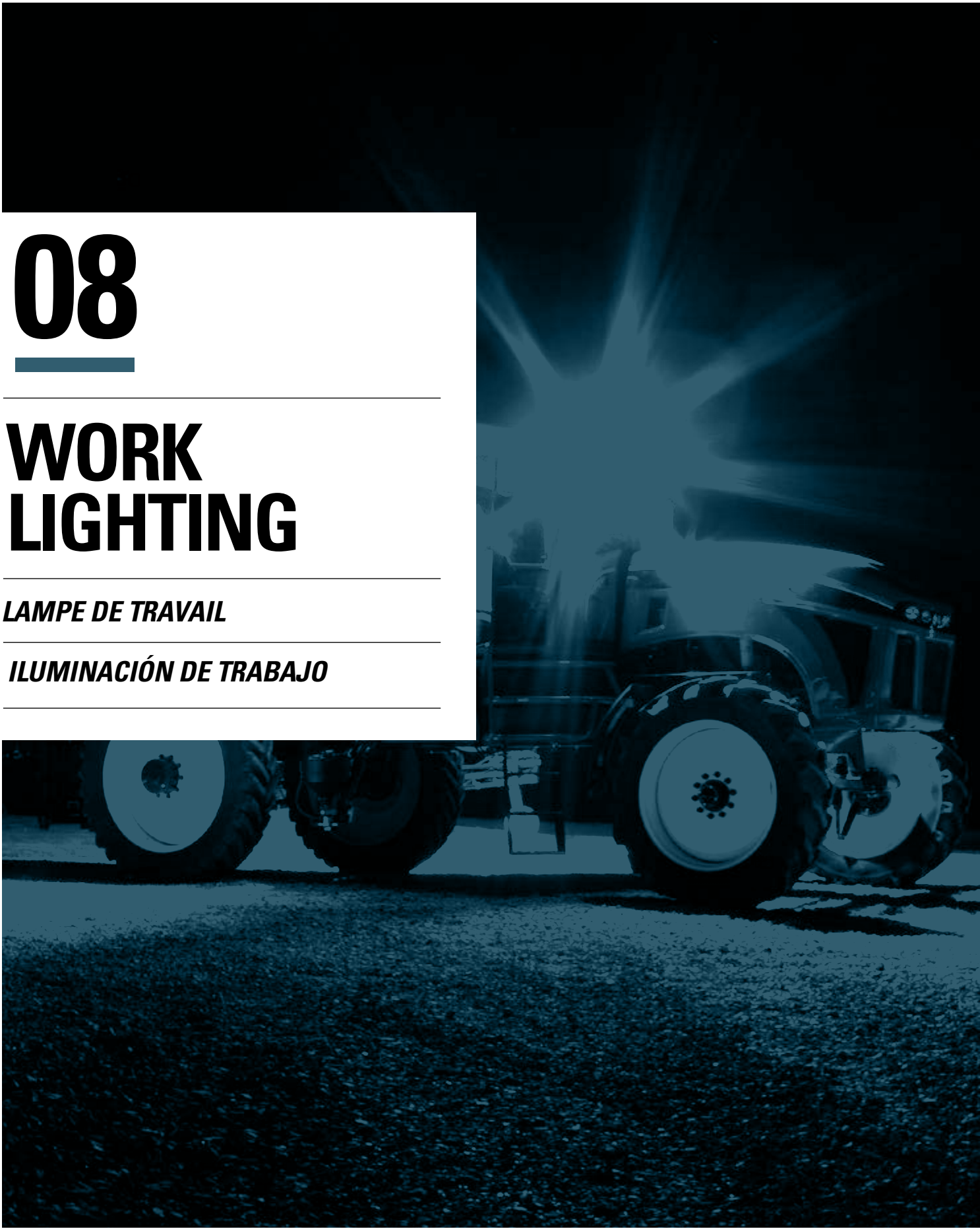

08

WORK LIGHTING

LAMPE DE TRAVAIL

ILUMINACIÓN DE TRABAJO

 © 2019 All Rights Reserved, Grote® Industries, Inc.

GROTE® LED WORK LAMPS: HIGH OUTPUT, ULTRA RUGGED

WHEN THE WORK JUST HAS TO GET DONE

HIGH OUTPUT:
Advanced LED technology plus sophisticated reflector optics waste less light, put more usable light on the task.

ULTRA RUGGED:
Field tested to excel in brutal off-road conditions. SAE J575E™-compliant designs protect against vibration, corrosion, moisture, dust, and most direct impacts.

COLOR TEMPERATURE OPTIMIZED FOR PRODUCTIVITY:
Noon-time sun-like color temperature output allows work crews to do better work over longer periods of time without eye fatigue.

READY FOR ANYTHING:
Grote® work lamps provide superior performance on mining, construction, off road, agriculture, utility, and emergency vehicles.

© 2019 All Rights Reserved, Grote® Industries, Inc.

GROTE® LED RADIUS LIGHT

LED

FEATURES & BENEFITS

- Tough, durable and lightweight cast aluminum housing
- Six 200-lumen LEDs that produce daylight-like visibility in a broad area
- TIR lens for efficiently distributed lighting
- Bi-voltage system for 12-volt and 24-volt systems
- Vibration-, dust-, corrosion-, and moisture-resistant
- Overvoltage protection to prevent voltage spike damage
- Spacer designed for extended installation and wire routing

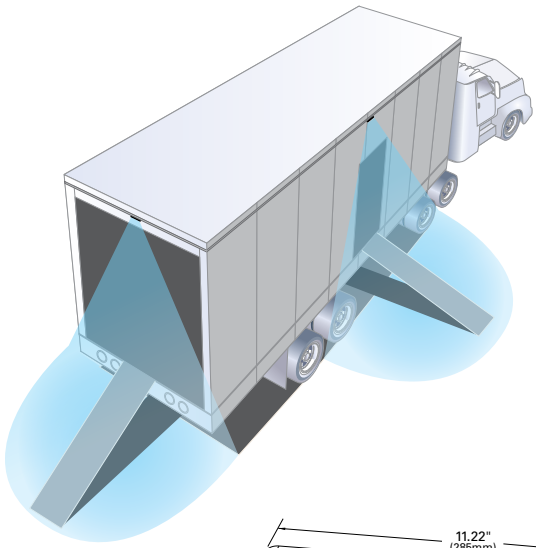

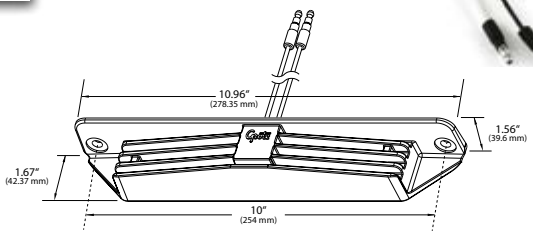

Spacer/Wire Guide

Gasket

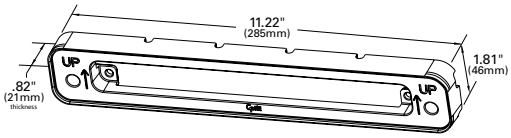

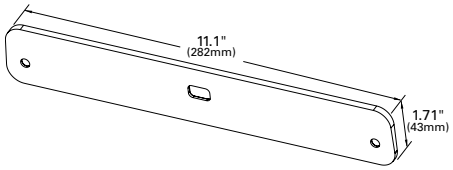

Part Number	Product Description	Voltage (V)	Amperage (A)
64M11-5 MULTI RETAIL	Grote® Radius Light Assembly Spacer/Wire Guide, Gasket	12/24	1.5A at 12V / .75A at 24V
49501-3	Space/Wire Guide, Bulk Pack		
49511-3	Gasket, Bulk Pack		

Materials	Regulations / Standards	Ingress Protection
Polycarbonate Lens	FMVSS 108 14.5.1. (Vibration)	IP69K
Cast Aluminum Housing	FMVSS 108 14.5.3. (Dust)	
Weight: 16 oz.	FMVSS 108 14.5.4. (Corrosion)	
	SAE 2139 4.2.2 (Submersion)	
	SAE J1455™ 4.2 (Humidity/Temperature)	

VMRS Code: 034-006-031- 64M11-5
034-006-034 - 49501-3
034-001-122 - 49511-3

 © 2019 All Rights Reserved, Grote® Industries, Inc.

GROTE® LED FAIRING LIGHT

LED

FEATURES & BENEFITS

- Increases trailer perimeter lighting
- Durable construction with cast aluminum housing & polycarbonate lens
- Low, contoured design minimizes chances of external impact damage
- Bi-voltage system for 12-volt and 24-volt systems
- Includes gasket for surface mounting or spacer/wire guide

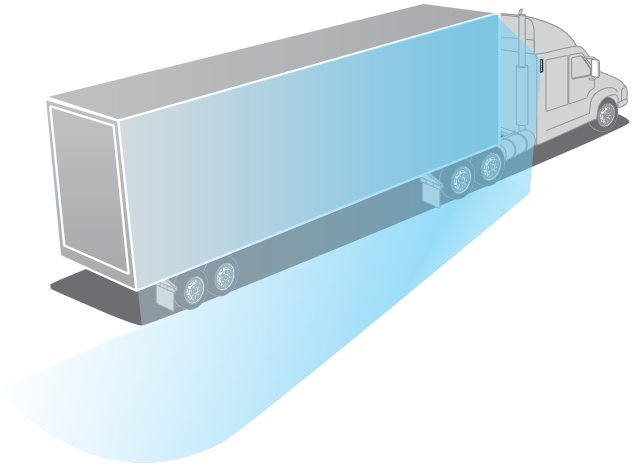

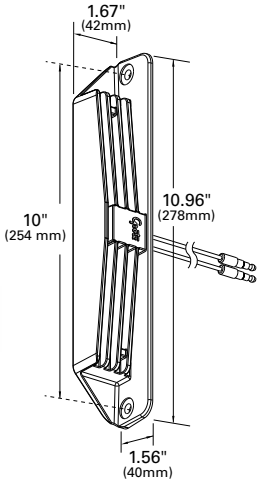

Spacer/Wire Guide

Gasket

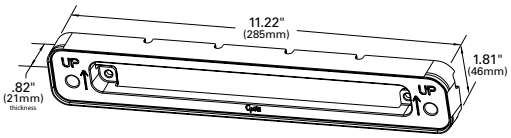

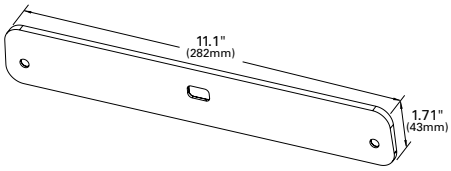

Part Number	Product Description	Voltage (V)	Amperage (A)
64M21-5 MULTI RETAIL	Grote® LED Fairing Light	12/24	1.5A at 12V / .75A at 24V
49501-3	Space/Wire Guide, Bulk Pack		
49511-3	Gasket, Bulk Pack		

Materials	Regulations / Standards	Ingress Protection
Polycarbonate Lens	FMVSS 108 14.5.1. (Vibration)	IP69K
Cast Aluminum Housing	FMVSS 108 14.5.3. (Dust)	
Weight: 16 oz.	FMVSS 108 14.5.4. (Corrosion)	
	SAE 2139 4.2.2 (Submersion)	
	SAE J1455™ 4.2 (Humidity/Temperature)	

VMRS Code: 034-006-031- 64M21-5
034-006-034 - 49501-3
034-001-122 - 49511-3

© 2019 All Rights Reserved, Grote® Industries, Inc.

TRILLIANT® CUBE LED WORK LAMPS TIER 1 OUTPUT

LED

FEATURES & BENEFITS

- Compact 4"x 4" lamps available in 1,200-lumen model
- Highest quality electronic components and advanced Grote® circuit design provides electronically quiet operation. This ensures long life, consistent light output, and protection from voltage spikes and electromagnetic interference
- All-weather design means consistent, reliable light for the task duration regardless of conditions
- Rugged SAE J575E™-compliant construction protects against vibration, corrosion, moisture, and dust
- Sophisticated reflector optics waste less light, focuses more light on task

63991

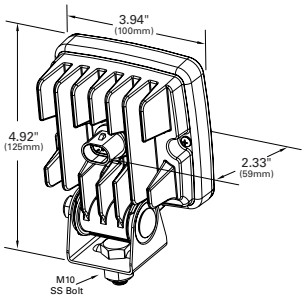

Hard Shell SuperSeal

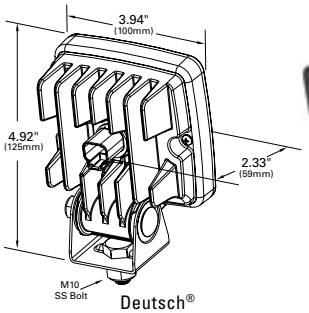

Deutsch®

63L21

63E23

63981

Part Number		Light Pattern	Connection Type	Product Description	Light Output (Usable Lumens)	Wattage (W)	Voltage (V)	Amperage (A)
63981	ECE MULTI	Flood	Hard Shell SuperSeal	4"X4" Work Lamp W/Pigtail	1,200	17	12/24	1.4/.7
63981-5	ECE MULTI RETAIL	Flood	Hard Shell SuperSeal	4"X4" Work Lamp W/Pigtail	1,200	17	12/24	1.4/.7
63991	ECE MULTI	Wide Flood	Hard Shell SuperSeal	4"X4" Work Lamp W/Pigtail	1,200	17	12/24	1.4/.7
63991-5	ECE MULTI RETAIL	Wide Flood	Hard Shell SuperSeal	4"X4" Work Lamp W/Pigtail	1,200	17	12/24	1.4/.7
63H31	ECE	Flood	Deutsch®	4"X4" Work Lamp No Pigtail	1,200	17	48	0.35
63E23	ECE MULTI	Flood	Deutsch®	4"X4" Work Lamp, Amber Lens	1,200	17	12/24	1.4/.7
63L21	ECE MULTI	Near Flood	Deutsch®	4"X4" Work Lamp No Pigtail	1,200	17	9–32	0.75–1.5
63U01	ECE	Flood	Deutsch®	4"X4" Work Lamp No Pigtail	1,200	23	12	1.9
63U41	ECE	Near Flood	Deutsch®	4"X4" Work Lamp No Pigtail	1,200	23	12	1.9

All figures listed are based on nominal voltage

Accessories

Part Number	Description	Fits
68580	Hard Shell SuperSeal Pigtail Blunt Cut	All Hard Shell SuperSeal lamps
68610	Deutsch Pigtail Blunt Cut	All Deutsch® lamps

Materials	Regulations / Standards	Ingress Protection
Powder-Coated Cast Aluminum Housing/CRS, Zinc-Plated Bracket/ Polycarbonate Lens	ECE R10, Dir. 72/245/EEC, Amended by 2006/28/EC CE	IP69K

VMRS Code: 034-006-031

 © 2019 All Rights Reserved, Grote® Industries, Inc.

TRILLIANT® CUBE LED WORK LAMP TIER 2 OUTPUT

LED

FEATURES & BENEFITS

- Compact 4"x 4" lamps available in 2,000- and 3,000-lumen models
- Highest quality electronic components and advanced Grote® circuit design provides electronically quiet operation. This ensures long life, consistent light output, and protection from voltage spikes and electromagnetic interference
- All-weather design means consistent, reliable light for the task duration regardless of conditions
- Rugged SAE J575E™-compliant construction protects against vibration, corrosion, moisture, and dust
- Sophisticated reflector optics waste less light, focuses more light on task

63F61

63F71

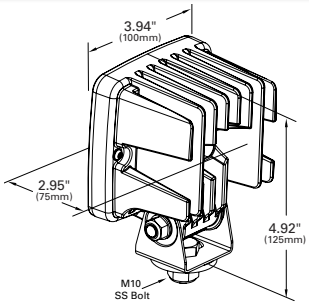

Part Number	Light Pattern	Connection Type	Product Description	Light Output (Usable Lumens)	Wattage (W)	Voltage (V)	Amperage (A)
63W01 ECE MULTI	Long Range	Deutsch®	4"X4" Work Lamp, No Pigtail	2,000	37	9–32V	2.6A at 14V 1.3 at 28V
63W11 ECE MULTI	Long Range	Hard Shell SuperSeal	4"X4" Work Lamp	2,000	37	9–32V	2.6A at 14V 1.3 at 28V
63W21 ECE MULTI	Close Range	Deutsch®	4"X4" Work Lamp, No Pigtail	2,000	37	9–32V	2.6A at 14V 1.3 at 28V
63W31 ECE MULTI	Close Range	Hard Shell SuperSeal	4"X4" Work Lamp	2,000	37	9–32V	2.6A at 14V 1.3 at 28V
63F21	Flood	Deutsch®	4"X4" Work Lamp, No Pigtail	3,000	36	12V	3A
63F31 ECE	Flood	Deutsch®	4"X4" Work Lamp, No Pigtail	3,000	36	24V	1.5A
63F51	Wide Flood	Deutsch®	4"X4" Work Lamp No Pigtail	3,000	36	24V	1.5A
63F61	Flood	Hard Shell SuperSeal	4"X4" Work Lamp	3,000	36	12V	3A
63W41 ECE MULTI	Long Range	Deutsch®	4"X4" Work Lamp, No Pigtail	3,000	45	9–32V	3.2A at 14V 1.6 at 28V
63W61 ECE MULTI	Close Range	Deutsch®	4"X4" Work Lamp, No Pigtail	3,000	45	9–32V	3.2A at 14V 1.6 at 28V
63W71 ECE MULTI	Close Range	Hard Shell SuperSeal	4"X4" Work Lamp	3,000	45	9–32V	3.2A at 14V 1.6 at 28V

All figures listed are based on nominal voltage

Accessories

Part Number	Description	Fits
68580	Hard Shell SuperSeal, Blunt Cut	All Hard Shell SuperSeal lamps
68610	Deustch®, Blunt Cut	All Deustch® lamps

VMRS Code: 034-006-031

Materials	Regulations / Standards	Ingress Protection
Powder-Coated Cast Aluminum Housing/CRS, Zinc Plated Bracket/ Polycarbonate Lens	ECE R10, Dir. 72/245/EEC, Amended by 2006/28/EC CE	IP69K

© 2019 All Rights Reserved, Grote® Industries, Inc.

TRILLIANT® OVAL LED TIER 1 WORK LAMPS

LED

FEATURES & BENEFITS

- Highest quality electronic components and advanced Grote® circuit design provides electronically quiet operation.
  This ensures long life, consistent light output, and protection from voltage spikes and electromagnetic interference
- All-weather design means consistent, reliable light for the task duration regardless of conditions
- Rugged SAE J575E™-compliant construction protects against vibration, corrosion, moisture, and dust
- Two beam patterns to choose from (Flood and Wide Flood). Sophisticated reflector optics waste less light, focuses more light on task

63F81

1200 Lumen Flood

63F91

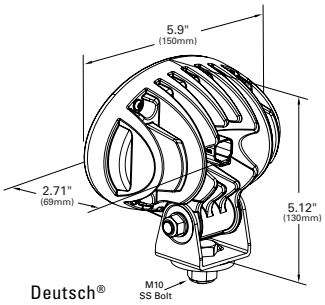

Deutsch®

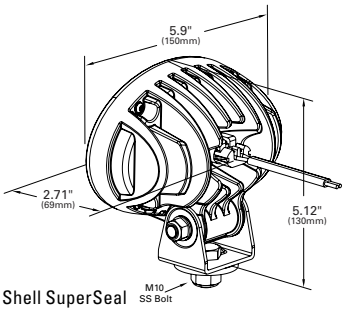

Hard Shell SuperSeal

Part Number	Light Pattern	Connection Type	Product Description	Light Output (Usable Lumens)	Wattage (W)	Voltage (V)	Amperage (A)
63F81 ECE MULTI	Flood	Hard Shell SuperSeal	Oval Work Lamp w/Pigtail	1,200	24	12/24	2/1
63F81-5 ECE MULTI RETAIL	Flood	Hard Shell SuperSeal	Oval Work Lamp w/Pigtail	1,200	24	12/24	2/1
63F91 ECE MULTI	Wide Flood	Hard Shell SuperSeal	Oval Work Lamp w/Pigtail	1,200	24	12/24	2/1
63G01 ECE MULTI	Flood	Deutsch®	Oval Work Lamp	1,200	24	12/24	2/1
63G11 ECE MULTI	Wide Flood	Deutsch®	Oval Work Lamp	1,200	24	12/24	2/1
64W01 ECE MULTI	Long Range	Deutsch®	Oval Work Lamp	2,000	37	9–32	1.3–2.6
64W11 ECE MULTI	Close Range	Deutsch®	Oval Work Lamp	2,000	37	9–32	1.3–2.6

All figures listed are based on nominal voltage

Accessories

Part Number	Description	Fits
68580	Hard Shell SuperSeal Pigtail Blunt Cut	All Hard Shell SuperSeal Lamps
68610	Deutsch® Pigtail Blunt Cut	All Deutsch® Lamps

Materials	Regulations / Standards	Ingress Protection
Powder-Coated Cast Aluminum Housing/CRS, Zinc Plated Bracket/ Polycarbonate Lens	ECE R10, Dir. 72/245/EEC, Amended by 2006/28/EC CE	IP69K

VMRS Code: 034-006-031

 © 2019 All Rights Reserved, Grote® Industries, Inc.

TRILLIANT® OVAL LED TIER 2 WORK LAMPS

LED

FEATURES & BENEFITS

- Highest quality electronic components and advanced Grote® circuit design provides electronically quiet operation. This ensures long life, consistent light output, and protection from voltage spikes and electromagnetic interference
- All-weather design means consistent, reliable light for the task duration regardless of conditions
- Rugged SAE J575E™-compliant construction protects against vibration, corrosion, moisture, and dust
- Two beam patterns to choose from (Flood and Wide Flood). Sophisticated reflector optics waste less light, focuses more light on task

63J11

3,000-Lumen Wide Flood

63J01

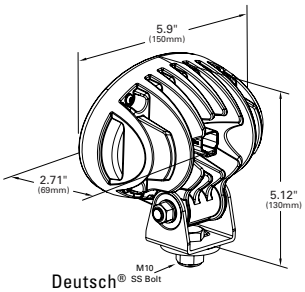

Deutsch®

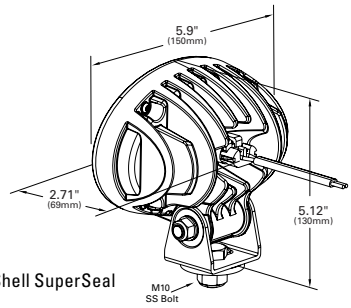

Hard Shell SuperSeal

Part Number	Light Pattern	Connection Type	Product Description	Light Output (Usable Lumens)	Wattage (W)	Voltage (V)	Amperage (A)
63J01 ECE MULTI	Flood	Hard Shell SuperSeal	High Output Oval Work Lamp, w/Pigtail	3,000	36	12/24	3/1.5
63J11 ECE MULTI	Wide Flood	Hard Shell SuperSeal	High Output Oval Work Lamp, w/Pigtail	3,000	36	12/24	3/1.5
63J21 ECE MULTI	Flood	Deutsch®	High Output Oval Work Lamp	3,000	36	12/24	3/1.5
63J31 ECE MULTI	Wide Flood	Deutsch®	High Output Oval Work Lamp	3,000	36	12/24	3/1.5

All figures listed are based on nominal voltage

Accessories

Part Number	Description	Fits
68580	Hard Shell SuperSeal Pigtail Blunt Cut	All Hard Shell SuperSeal Lamps
68610	Deutsch® Pigtail Blunt Cut	All Deutsch® Lamps

VMRS Code: 034-006-031

Materials	Regulations / Standards	Ingress Protection
Powder-Coated Cast Aluminum Housing/CRS, Zinc Plate Bracket/ Polycarbonate Lens	ECE R10, Dir. 72/245/EEC, Amended by 2006/28/EC CE	IP69K

© 2019 All Rights Reserved, Grote® Industries, Inc.

TRILLIANT® MINI LED WORK LAMPS

LED

FEATURES & BENEFITS

- LEDs are rated for 50,000 hours for long-lasting service
- Polycarbonate hard coated lens provides many years of service
- 3"X5" size makes this lamp a natural LED upgrade for many incandescent and halogen sealed beams

63601

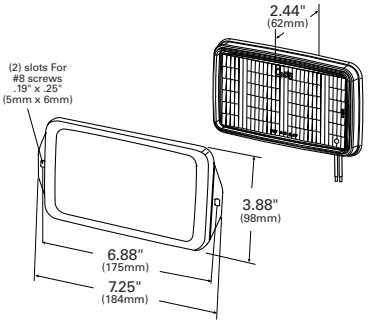

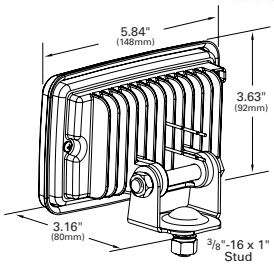

63610
Flush Mount Version

63621

63611

Part Number	Light Pattern	Connection Type	Product Description	Light Output (Usable Lumens)	Wattage (W)	Voltage (V)	Amperage (A)
63601 ECE	Spot	Hardwire	3"X5" Work Lamp	700	17	12	1.4
63601-5 ECE RETAIL	Spot	Hardwire	3"X5" Work Lamp	700	17	12	1.4
63610 ECE	Flood	Hardwire	3"X5" Flush Mount Work Lamp	700	17	12	1.4
63602	Spot	Hardwire	3"X5" Work Lamp Red Lens	135		12	1.64
63611 ECE	Flood	Hardwire	3"X5" Work Lamp	700	17	12	1.4
63611-5 ECE RETAIL	Flood	Hardwire	3"X5" Work Lamp	700	17	12	1.4
63731	Spot	Hardwire	3"X5" Work Lamp	700	17	24	0.7
63741 ECE	Flood	Hardwire	3"X5" Work Lamp	700	17	24	0.7
63741-5 ECE	Flood	Hardwire	3"X5" Work Lamp	700	17	24	0.7
63621 ECE	Trapezoid	Hardwire	3"X5" Work Lamp	700	17	12	1.4
63621-5 ECE RETAIL	Trapezoid	Hardwire	3"X5" Work Lamp	700	17	12	1.4
63751	Trapezoid	Hardwire	3"X5" Work Lamp	700	17	24	0.7
63751-5 ECE RETAIL	Trapezoid	Hardwire	3"X5" Work Lamp	700	17	24	0.7

All figures listed are based on nominal voltage

Accessories

Part Number	Description	Fits
94690	Flush mount bracket and gasket	All Trilliant® Mini lamps to convert to Flush Mount

Materials	Regulations / Standards	Ingress Protection
Powder-Coated Die-Cast Aluminium Housing/ Polycarbonate Lens Stainless Steel Hardware	ECE R10, Dir. 72/245/EEC, Amended by 2006/28/EC	IP69K

VMRS Code: 034-001-015 - 63601, 63601-5, 63602, 63731
034-006-031- 63610, 63611, 63611-5, 63741, 63741-5, 63621, 63621-5, 63751, 63751-5

 © 2019 All Rights Reserved, Grote® Industries, Inc.

TRILLIANT® LED WORK LAMPS

LED

FEATURES & BENEFITS
- Long-lasting, high output LED work lamp
- Field tested in brutal off-road conditions
- Easily mountable with a durable 1/2" stud mounting bracket, (also features Aim-N-Go technology on some models)

63E41

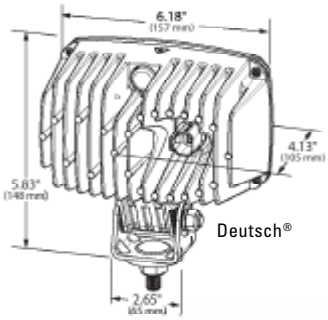

Deutsch®

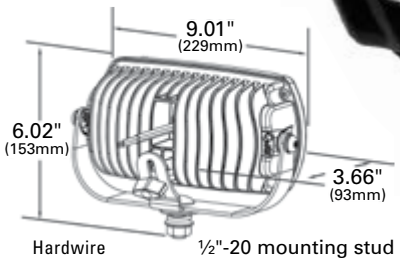

Hardwire ½"-20 mounting stud

63Z81 63Z71 63Z61

63591

63571
Lens Optics Version

Part Number	Light Pattern	Housing Color	Connection Type	Optic Design	Light Output (Usable Lumens)	Wattage (W)	Voltage (V)	Amperage (A)
63571 ECE MULTI	Spot	Black	Hardwire	Lens	1,300	50	12/24	4.2/2.1
63581 ECE MULTI	Flood	Black	Hardwire	Lens	1,600	50	12/24	4.2/2.1
63E41 ECE MULTI	Flood	Black	Hardwire	Reflector	2,400	50	12/24	4.2/2.1
63E51 ECE MULTI	Wide Flood	Black	Hardwire	Reflector	2,200	50	12/24	4.2/2.1
63E71	Wide Flood	Black	Hardwire	Reflector	2,200	50	24	2.1
63591 ECE MULTI	Trapezoid	Black	Hardwire	Lens	1,600	50	12/24	4.2/2.1
63Z61 ECE MULTI	Close/Long Hybrid	Black	Deutsch®	Reflector	5,000	55	14-32	4.0-2.0
63Z71 ECE MULTI	Close Range	Black	Deutsch®	Lens	5,000	55	14-32	4.0-2.0
63Z81 ECE MULTI	Long Range	Black	Deutsch®	Lens	5,000	55	14-32	4.0-2.0

Accessories

All figures listed are based on nominal voltage

Part Number	Description	Fits
43652	Black Bracket	All Trilliant® Lamps

Materials	Regulations / Standards	Ingress Protection
Housing: Powder-Coated Aluminum Bracket: CRS, Black Zinc-Plated Lens: Polycarbonate	ECE R10, Dir. 72/245/EEC, Amended by 2006/28/EC	IP69K

VMRS Code: 034-001-015 - 63571
034-006-031 - 63581, 63E41, 63E51, 63E71, 63591, 63Z61, 63Z71, 63Z81

© 2019 All Rights Reserved, Grote® Industries, Inc.

T26 LED WORK LAMP

LED

FEATURES & BENEFITS

- Efficient light engine projects 1,800 to 3,000 effective lumens using only 18 watts of power across 10-48 volts
- Rugged mechanical design ensures consistent performance and long life in the harshest environments
- Small size combined with tough construction allows mounting in places where larger or less rugged lamps cannot fit or survive
- Advanced circuit design provides electronically quiet operation; protects against EMI without interfering with other electronic devices
- Clean, white light designed to represent true colors, just like day light

64G01

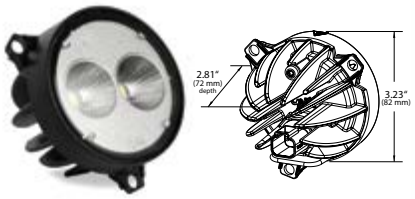

64F11 - Flush Mount

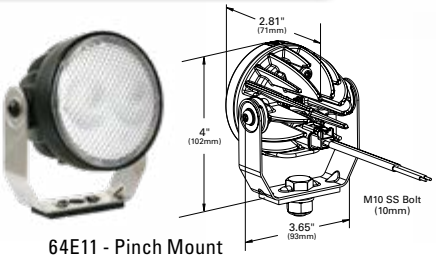

64E11 - Pinch Mount

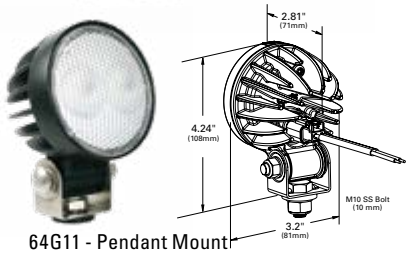

64G11 - Pendant Mount

Part Number	Light Pattern	Connection Type	Product Description	Light Output (Usable Lumens)	Wattage (W)	Voltage (V)	Amperage (A)
64E01 ECE MULTI	Far Flood	Deutsch®	Pinch Mount	1,800	18	10–48	1.75–.36
64E01-5 ECE MULTI RETAIL	Far Flood	Deutsch®	Pinch Mount	1,800	18	10–48	1.75–.36
64E11 ECE MULTI	Near Flood	Deutsch®	Pinch Mount	1,800	18	10–48	1.75–.36
64E11-5 ECE MULTI RETAIL	Near Flood	Deutsch®	Pinch Mount	1,800	18	10–48	1.75–.36
64F11 ECE MULTI	Near Flood	Deutsch®	Flush Mount	1,800	18	10–48	1.75–.36
64F71 ECE	Near Flood	Deutsch®	Flush Mount	1,000	20	24	.88
64G01 ECE MULTI	Far Flood	Deutsch®	Pendant Mount	1,800	18	10–48	1.75–.36
64G01-5 ECE MULTI RETAIL	Far Flood	Deutsch®	Pendant Mount	1,800	18	10–48	1.75–.36
64G11 ECE MULTI	Near Flood	Deutsch®	Pendant Mount	1,800	18	10–48	1.75–.36
64G11-5 ECE MULTI RETAIL	Near Flood	Deutsch®	Pendant Mount	1,800	18	10–48	1.75–.36
64G41 ECE	Far Flood	Deutsch®	Pendant Mount	1,000	20	12	1.7
64G51 ECE	Near Flood	Deutsch®	Pendant Mount	1,000	20	12	1.7
64G61 ECE	Far Flood	Deutsch®	Pendant Mount	1,000	20	24	.88
64G71 ECE	Near Flood	Deutsch®	Pendant Mount	1,000	20	24	.88

All figures listed are based on nominal voltage

Accessories

Part Number	
68610	Replacement Harness - Deutsch® pigtail
01-9950-H1	Flush Mount Clips

VMRS Code: 034-006-031

Materials	Regulations / Standards	Ingress Protection
Housing: Powder-Coated Aluminum Lens: Polycarbonate Hardware: CRS, Zinc-plated	SAE J575™ and ISO 60068-2-6:1996 (impact), SAE J1455™ (thermal stress), SAE J2139™ (corrosion), ISO16750-4:2003 (storage temperature) CE	IP69K

 © 2019 All Rights Reserved, Grote® Industries, Inc.

TRILLIANT® 36 LED WORK LAMPS

LED

FEATURES & BENEFITS

- Hard-coated lens for durability and protection against UV
- Thermal pull-back circuit to protect the LEDs from overheating
- Aluminum housing with black powder coating
- Bulb termination accommodates either screw or FastOn cable connections
- Color temperature provides a natural contrast most like sunlight, reducing eye fatigue and optimizing job performance
- Replaceable lens with three stainless steel Phillips head screws

63821

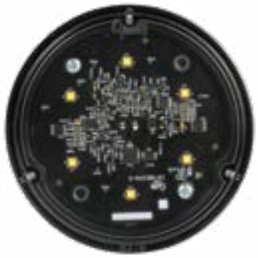

63831

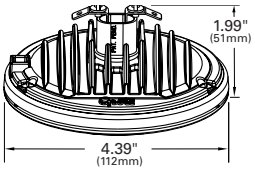

63861

63871

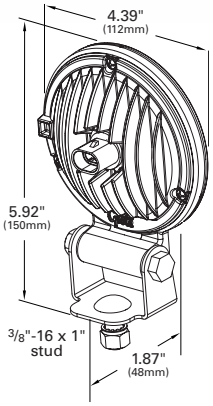

Part Number	Light Pattern	Connection Type	Product Description	Light Output (Usable Lumens)	Wattage (W)	Voltage (V)	Amperage (A)
63971 MULTI	TractorPlus	Hard Shell SuperSeal	Replaceable bulb version	850	17	12/24	1.3/.7
63H81 MULTI	Wide Flood	Hard Shell SuperSeal	Replaceable bulb version	850	17	12/24	1.3/.7
63H01 MULTI	Wide Flood	Deutsch®	Integrated bracket	850	17	12/24	1.3/.7
63H11 MULTI	TractorPlus	Deutsch®	Integrated bracket	850	17	12/24	1.3/.7
63821-5 MULTI RETAIL	TractorPlus	Spade/Screw Terminals	Replaceable bulb version	850	17	12/24	1.3/.7
63821 MULTI	TractorPlus	Spade/Screw Terminals	Replaceable bulb version	850	17	12/24	1.3/.7
63831-5 MULTI RETAIL	Wide Flood	Spade/Screw Terminals	Replaceable bulb version	850	17	12/24	1.3/.7
63831 MULTI	Wide Flood	Spade/Screw Terminals	Replaceable bulb version	850	17	12/24	1.3/.7
63861-5 MULTI ECE RETAIL	TractorPlus	Hard Shell SuperSeal	Integrated bracket	850	17	12/24	1.3/.7
63861 MULTI ECE	TractorPlus	Hard Shell SuperSeal	Integrated bracket	850	17	12/24	1.3/.7
63871-5 MULTI RETAIL	Wide Flood	Hard Shell SuperSeal	Integrated bracket	850	17	12/24	1.3/.7
63871 MULTI	Wide Flood	Hard Shell SuperSeal	Integrated bracket	850	17	12/24	1.3/.7

All figures listed are based on nominal voltage

Accessories

Part Number	Description	Fits
68580	Hard Shell SuperSeal Pigtail Blunt Cut	All Hard Shell SS T36 Lamps
68610	Deutsch® Pigtail Blunt Cut	63H01, 63H11

VMRS Code: 034-006-031

Materials	Regulations / Standards	Ingress Protection
Housing: Powder-Coated Aluminum Lens: Polycarbonate	ECE R10, Dir. 72/245/EEC, Amended by 2006/28/EC	IP69K

© 2019 All Rights Reserved, Grote® Industries, Inc.

LED BAR LAMPS

LED

FEATURES & BENEFITS

- Rugged bar lamps feature LEDs to produce a high intensity light output with a color temperature that is easy on the eyes
- Multiple lengths and patterns to make choosing the right lamp a simple process
- Each lamp ships with cast aluminum brackets, harness, relay, fuse and in-dash switch

64J11

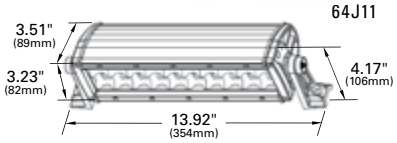

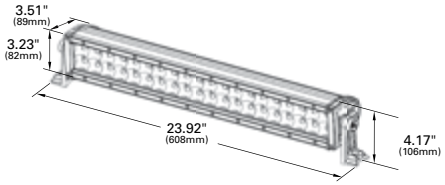

64J21

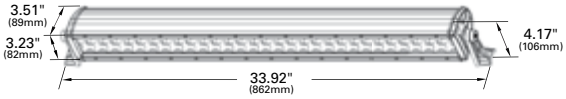

64J31

Part Number	Light Pattern	Product Description	Light Output (Usable Lumens)	LPW (Lumens per Watt)	Voltage (V)	Amperage (A)
64J11 RETAIL MULTI	Far Flood	10" Double Row	2,700	61	12/24	3.5/1.5
64J21 RETAIL MULTI	Far Flood	20" Double Row	5,400	61	12/24	7/3
64J31 RETAIL MULTI	Far Flood	30" Double Row	8,100	61	12/24	10.5/4.5

All figures listed are based on nominal voltage

Accessories

Part Number
Replacement Harness: 67760 (10" lamp), 67770 (20"-50" lamps)
Hardware Kit: 98160
Relay: 84-1093 For use with harness if voltage over 14V

Materials	Regulations / Standards	Ingress Protection
Housing: Anodized Aluminum Lens: Polycarbonate	400N pull test (harness), ASTM B117 Corrosion, 3.3G Vibration test	IP67 and IP69K

VMRS Code: 034-006-031

 © 2019 All Rights Reserved, Grote® Industries, Inc.

BRITE ZONE® DISPLAY PROGRAM

00200 *3 Foot In-line / Endcap*

00211 *Countertop Display*

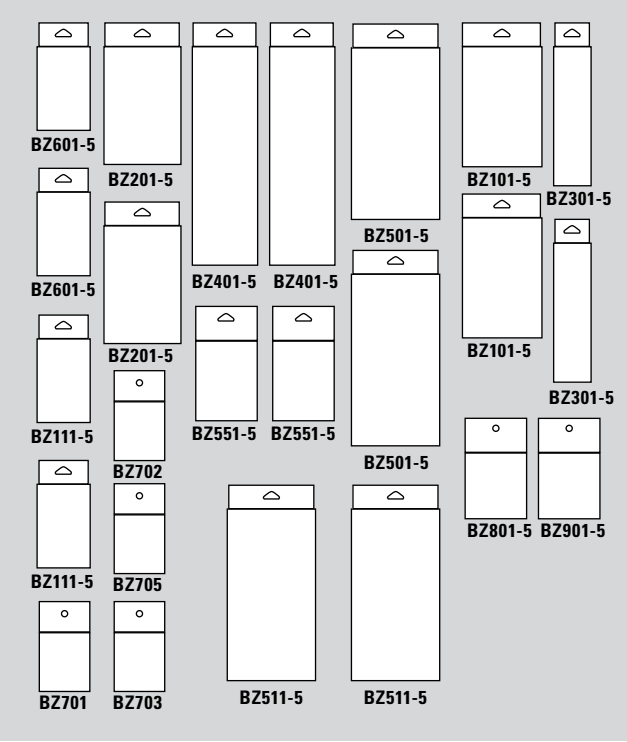

Part Number	Description
00200	Brite Zone® In-Line Display
00211	Brite Zone® Countertop Display

VMRS Code: 002-058-017

© 2019 All Rights Reserved, Grote® Industries, Inc.

LED BRITE ZONE® HANDHELD LED WORK LAMPS

FEATURES & BENEFITS

- Go Anywhere LED Work Lamp comes with wall & car chargers, EZ Grip LED Work Lamp comes with a wall charger
- The magnetic polymer base allows you to secure the lamp to most metal surfaces
- With rugged, durable construction and LED power that far outshines halogen, Brite Zone® lamps get the job done
- Long after the sun goes down, whether you're boating, mowing, off-roading, or working, you need lamps as tough and tireless as you are.
- Grote's Brite Zone® range has the LED lamp to shed light on any use – even tow trucks, garbage trucks and forklifts – without breaking the bank

BZ501-5

BZ511-5

BZ801-5

BZ901-5

BZ701 BZ702 BZ703 BZ705

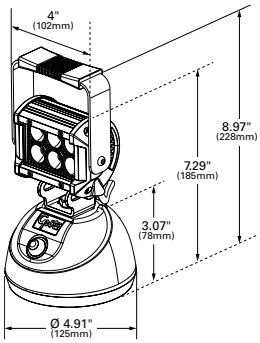

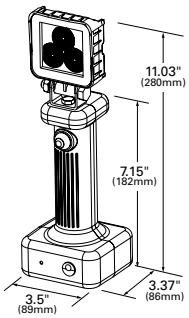

BZ401-5

Part Number		Description	LEDs	Power Consumption	Raw Lumens	Voltage (V)
BZ501-5	RETAIL	Go Anywhere LED Work Lamp	6	12 Watts	1,100	12 Volts DC
BZ511-5	RETAIL	Go Anywhere Mossy Oak Camo LED Work Lamp	6	12 Watts	1,100	12 Volts DC
BZ401-5	RETAIL	EZ Grip LED Work Lamp	3	12 Watts	775	12 Volts DC
BZ701	RETAIL	Clear Lens For BZ501-5				
BZ702	RETAIL	Red Lens For BZ501-5				
BZ703	RETAIL	Amber Lens For BZ501-5				
BZ705	RETAIL	Blue Lens For BZ501-5				
BZ801-5	RETAIL	Wall Charger for BZ401-5 or BZ501-5				
BZ901-5	RETAIL	Car Charger for BZ401-5 or BZ501-5				

All figures listed are based on nominal voltage

Materials	Light Output
Lens: Polycarbonate Housing: Die-Cast Aluminum Lamp with Polymer Base Bracket: Stainless Steel	Flood Pattern With Cool White Color

VMRS Code: 034-006-031

 © 2019 All Rights Reserved, Grote® Industries, Inc.

BRITE ZONE® LED WORK LAMPS

BRITE ZONE™ LED

FEATURES & BENEFITS

- With rugged, durable construction and LED power that far outshines halogen, Brite Zone® lamps get the job done
- Long after the sun goes down, whether you're boating, mowing, off-roading, or working, you need lamps as tough and tireless as you are.
- Grote's Brite Zone® range has the LED lamp to shed light on any use – even tow trucks, garbage trucks and forklifts – without breaking the bank
- Value priced to meet any budget

BZ201-5

BZ101-5

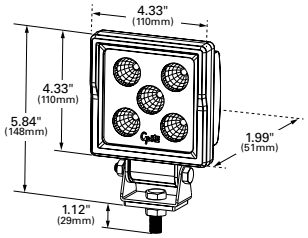

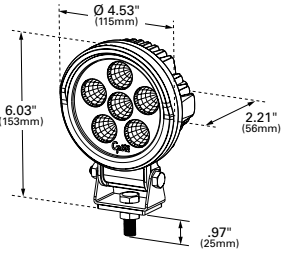

BZ601-5

BZ111-5

BZ551-5

BZ301-5

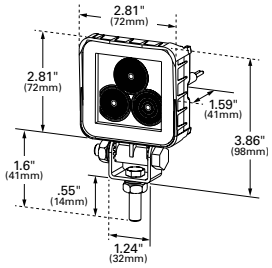

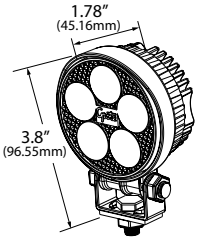

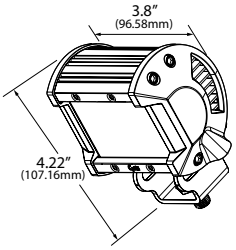

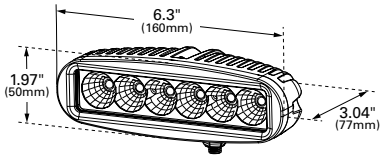

Part Number	Description	LEDs	Power Consumption	Raw Lumens	Voltage (V)
BZ101-5 RETAIL MULTI	Round Work Lamp	6	15 Watts	1,600	9–32V
BZ201-5 RETAIL MULTI	Square Work Lamp	5	13 Watts	1,100	9–32V
BZ301-5 RETAIL MULTI	Slim Work Lamp	6	15 Watts	1,400	9–32V
BZ601-5 RETAIL MULTI	Mini Square Work Lamp	3	8.1 Watts	775	12–36V
BZ111-5 RETAIL MULTI	Small Round Work Lamp	5	14 Watts	1,240	12–36V
BZ551-5 RETAIL MULTI	Rectangular Work Lamp	6	15 Watts	1,200	12–36V

All figures listed are based on nominal voltage

Materials	Light Output
Lens: Polycarbonate Housing: Die-Cast Aluminum Bracket: Stainless Steel	Flood Pattern With Cool White Colorbulb: 24-Volt - H3, 70

VMRS Code: 034-006-031

© 2019 All Rights Reserved, Grote® Industries, Inc.

PAR 36 UTILITY LAMPS

FEATURES & BENEFITS
- For versatile application as utility, fifth-wheel, back-up, tractor, forklift or off-road vehicle lamp

64931

64101

64111

63551

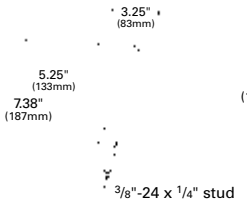

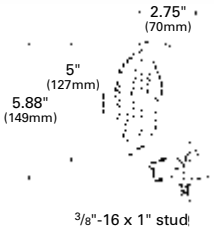

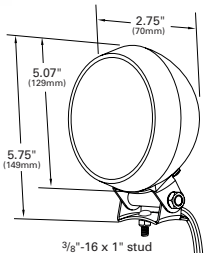

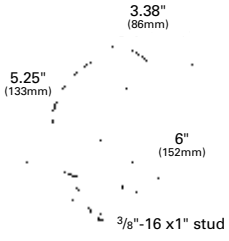

Part Number	Light Pattern	Product Description	Housing Material	Light Output (CP)	Wattage (W)	Voltage (V)	Amperage (A)
64931	Tractor	Incandescent Work Lamp	Rubber	3,000	35W	12V	2.7A
64931-5 RETAIL	Tractor	Incandescent Work Lamp	Rubber	3,000	35W	12V	2.7A
64921	Tractor	Incandescent Work Lamp	Rubber	5,000	50W	24V	1.8A
64101	Tractor	Incandescent Work Lamp	Steel	3,000	35W	12V	2.7A
64441	Trapezoid	Incandescent Work Lamp	Steel	3,000	35W	12V	2.7A
64111	Spot	Chrome Surveillance Lamp	Steel	33,000	35W	12V	2.7A
63551	Flood	4" LED In Rubber Housing	Rubber	400 Lm	7.7W	12V	0.6A

All figures listed are based on nominal values

Accessories

Part Number	Product Description	Fits
64930	Rubber Housing	Par 36 Bulbs
43300	Magnet Mounting Hardware	Pedestal Mount Lamps
63821	LED Replacement Bulb, TractorPlus	Rubber Lamps
63821-5 RETAIL	LED Replacement Bulb, TractorPlus	Rubber Lamps
63831	LED Replacement Bulb, Wide Flood	Rubber Lamps
63831	LED Replacement Bulb, Wide Flood	Rubber Lamps

Other Replacement Bulbs

Part Number	Product Description	Fits
4411	Par 36 Bulb	64931, 64101, 64441
4589	Par 36 Bulb	64921
7400	Halogen Par 36 Bulb	64111

VMRS Code: 034-001-015 - 64111
034-006-031 - 64931, 64931-5, 64921, 64101, 64441, 63551

 © 2019 All Rights Reserved, Grote® Industries, Inc.

PAR 46 UTILITY LAMPS

FEATURES & BENEFITS
- For versatile application as utility, fifth-wheel, back-up, tractor, or off-road vehicle lamp

64941

64341

63921

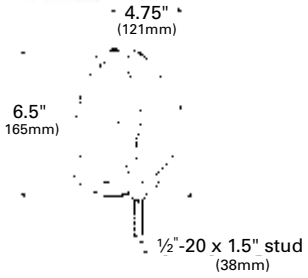

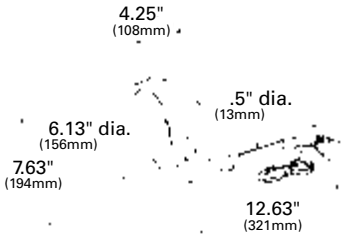

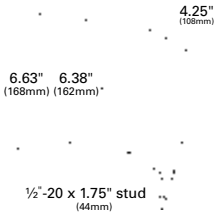

Part Number	Light Pattern	Product Description	Housing Material	Light Output (CP)	Wattage (W)	Voltage (V)	Amperage (A)
64941	Flood	Incandescent work lamp	Rubber	1,100	35W	12V	2.7A
64471	Flood	Halogen work lamp	Rubber	200,000	100W	12V	7.7A
64341	Tractor	Incandescent work lamp	Steel	1,110	35W	12V	2.7A
63921	Spot	Halogen adjustable surveillance lamp w/ handle, chrome finish	Steel	160,000	50W	12V	3.9A
63941	Spot	Halogen adjustable surveillance lamp, chrome finish	Steel	75,000	30W	12V	2.3A

All figures listed are based on nominal values

Accessories

Part Number	Description	Fits
64940	Rubber Housing	Par 46 Bulbs
64011	Steel Housing	Par 46 Bulbs
64021	Steel (Chrome) Housing	Par 46 Bulbs

VMRS Code: 034-001-015 - 63921, 64941
034-006-031 - 64471, 64341, 63941

Other Replacement Bulbs

Part Number	Description	Fits
4435	Spot Pattern Par 46 Lamps	64471, 63921, 63941
4413	Flood Pattern Par 46 Lamps	64941
4537	Par 46 Lamps	64471, 64941, 64341, 63921, 63941

© 2019 All Rights Reserved, Grote® Industries, Inc.

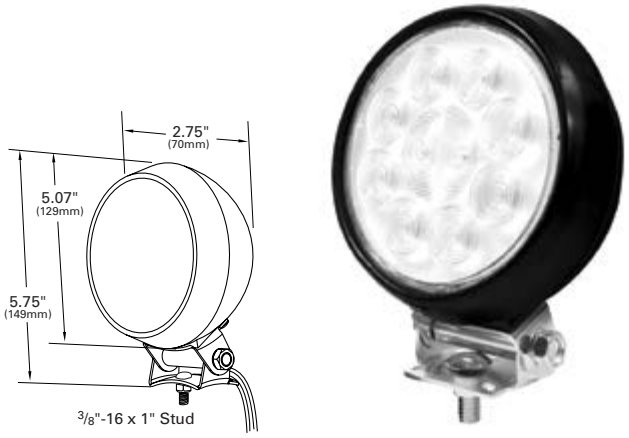

4" ROUND UTILITY LAMP

Cost-effective LED lighting option is rated at 50,000 hours • Hardwired for easy integration into current wiring system • Pattern closely resembles a spot pattern

63561 Clear, Rubber Housing

Material: Polycarbonate/Rubber (63561)
Finish: Clear/Black (63561)
Volts / Amps: 12V / .6A; 282 Lumens
VMRS Code: 034-001-015

COMPOSITE WORK LAMP

Composite design (bulb replaceable) • Multiple beam patterns for use in any application • Side or top mount • John Deere® replacement lamp

64611 Top Mount, Flood

Material: Nylon/Glass
Finish: Black
Volts / Amps: 12V / 3.9A
Bulb: 888, 95 CP
VMRS Code: 034-001-015

4" X 6" RECTANGULAR RUBBER WORK LAMP

Lamps maintains structural integrity through all weather conditions (-50°F to +150°F) • Reinforced, ribbed housing for added strength • Adjustable bracket with 12mm diameter stud

64891 Flood
64890 Housing only

Material: Rubber
Finish: Black
VMRS Code: 034-006-031

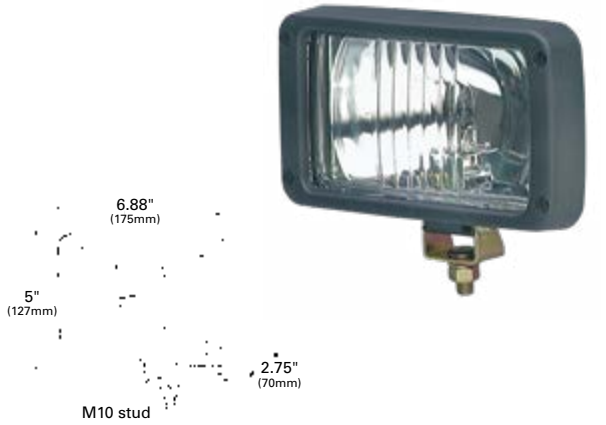

RECTANGULAR HALOGEN WORK LAMP

Available in trapezoid, spot and flood beam patterns • Rugged corrosion- and shock-resistant construction • For versatile application needs such as tractor, utility, fifth-wheel, or off-road

63151-5 Flood RETAIL
63171-5 Trapezoid RETAIL
63241-5 Flood RETAIL 24 VOLT

Material: Nylon
Finish: Black
Volts / Amps: Bulb H3, 55 Watt, 121 CP: 12V / 4.7A
Bulb H3, 70 Watt, 146 CP: 24V / 2.7A
Accessory: Bulb: 12V 90971-5, 24V 91051
VMRS Code: 034-006-031

 © 2019 All Rights Reserved, Grote® Industries, Inc.

LARGE RECTANGULAR HALOGEN WORK LAMP

Rugged corrosion and shock-resistant construction • For heavy or light duty • Versatile design suitable for applications such as tractor, utility, fifth-wheel, or off-road

63181-5 Flood RETAIL
63251-5 Flood RETAIL 24 VOLT

Material: Nylon
Finish: Black
Volts / Amps: Bulb H3, 55 Watt, 121 CP: 12V / 4.7A
Bulb H3, 70 Watt, 146 CP: 24V / 2.7A
Accessory: Bulb: 12V 90971-5, 24V 91051
VMRS Code: 034-006-031

TWIN-BEAM HALOGEN WORK LAMP

Reinforced nylon housing for strength and durability • Hardened-glass lens resists breakage from road hazards • Complies with SAE J575e™ vibration and corrosion standards

64901 Flood

Material: Nylon, Glass
Finish: Black
Volts / Amps: 12V / 9.4A, 55 Watt
Bulb: H3 (x 2)
Accessory: Bulb: 90971-5
VMRS Code: 034-006-031

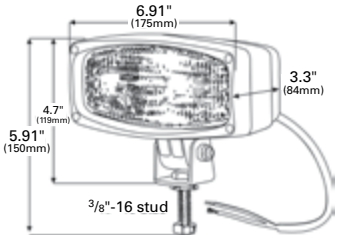

© 2019 All Rights Reserved, Grote® Industries, Inc.

PIGTAILS FOR WORK LAMPS

For more information on pigtail products see **Pigtails** section: page 254

DEUTSCH® CONNECTOR

68610 12" Long, Blunt Cut Wires

HARD SHELL SUPERSEAL CONNECTOR

68580 9" Long, Blunt Cut Wires

MOUNTING FOR WORK LAMPS

For more information on mounting products see **Mounting Options** section: page 264

FLUSH-MOUNT WORK LAMP BRACKET

94690 Stainless Steel

Material: Stainless Steel
Finish: Stainless Steel

WORK LIGHT MOUNTING BRACKET

94450 Steel Mounting Bracket

Material: 16 GA Steel
VMRS Code: 034-006-034

ADJUSTABLE BRACKET FOR TRILLIANT® LAMPS

43652 Bracket, Black

Material: Zinc
Finish: Black or White

REPLACEMENT LENSES

LENS MODEL NUMBER	FITS LAMP
09561	02001-4
09681	05001-5 05301-5 05041-5 05051-5

LENS MODEL NUMBER	FITS LAMP
09781	06021-4 06001-4 06201
09793	06021-4 06001-4 06201

09781

09793

09561

09681

Deutsch® is a registered trademark of TE Connectivity Corporation; John Deere® is a registered trademark of Deere & Company.

All product and company names are trademarks™ or registered® trademarks of their respective holders. Use of them does not imply any affiliation with or endorsement by them.

 © 2019 All Rights Reserved, Grote® Industries, Inc.

SIGN-UP FOR GROTE'S ENHANCED G24/7 VISIT ORDERS.GROTE.COM

Grote® Industries is pleased to announce the launch of the enhanced G24/7 system. This complimentary service is an innovative way to place orders, track order status and view all your Grote® product activity. From the convenience of your computer or mobile device, you can now access previously unavailable information that will help you more successfully manage your business and inventory.

ORDERS.GROTE.COM

NEW FEATURES

- ***PAY ANY INVOICE ONLINE ANY TIME***
- ***EASY CREDIT CARD PROCESSING***
- ***NOW MOBILE FRIENDLY***
- ***REPRINT PACKING LISTS AND INVOICES***

UPLOAD FROM MICROSOFT® EXCEL
Customers can also upload items from Microsoft® Excel to create orders.

REFER AND REORDER USING "MY LIST"
The user can create a list of products for future reference or to reorder.

E-MAIL NOTIFICATION
When a new order is created and when an order is shipped, unlimited recipients can receive an instant e-mail notification.

ORDER ENTRY ONLINE BY CUSTOMER PART NUMBER

USING G24/7, YOU CAN QUICKLY AND EASILY:

- Track the status of current orders
- Check the status of backorders
- Check for substitutions or replacements for obsolete parts
- Check Grote® inventory availability
- Confirm ship dates
- Link to shipping carrier
- View invoice information
- Track credits
- View weight & packaging information
- View previously placed orders
- View product technical information
- Reprint packing lists and invoices

© 2019 All Rights Reserved, Grote® Industries, Inc.

09

WARNING AND HAZARD

GYROPHARES ET FEUX D'AVERTISSEMENT

LÁMPARAS DE ADVERTENCIA Y PRECAUCIÓN

WWW.GROTE.COM | © 2019 All Rights Reserved, Grote® Industries, Inc.

LED BEACONS, CLASS I, TALL DOME

S-Link™ System* synchronizing capabilities with up to six other units. Allows for synchronization with other S-Link™ compatible products • Heavy-duty spun aluminum base with plastic base insert • 12 different selectable flash patterns in either of two phases, plus steady-on • High-Low power available on single color beacons & ability to isolate colors on dual color models • Available in dual color flash patterns

78010	LED Amber/Blue Beacon w/ Clear Dome	MULTI
78011	LED Clear Beacon w/ Clear Dome	MULTI
78013	LED Amber Beacon w/ Clear Dome	MULTI
78015	LED Blue Beacon w/ Clear Dome	MULTI
79070	LED Amber/Green Beacon w/Clear Dome	MULTI

Material: Polycarbonate / Aluminum Base
Standards: SAE J845™ Class I (78010, 78011, 78013); Class II (78015); Not SAE Approved (79070)
Volts / Amps: 12–24V / 0.6A at 12V
Lens: Internal Clear Lens 98251, Internal Amber Lens 98253, Internal Blue Lens 98255, External Clear Lens 98271
VMRS Code: 034-006-056

78013

78010

78015

LED BEACONS, CLASS I, TALL DOME

S-Link™ System* synchronizing capabilities with up to six other units. Allows for synchronization with other S-Link™ compatible products • Heavy-duty spun aluminum base with plastic base insert • 12 different selectable flash patterns in either of two phases, plus steady-on • Universal mounting: permanent mount, 1" pipe mount • Available in non-rotating single color operation only

79071	LED Clear Beacon w/Clear Dome	MULTI
79073	LED Amber Beacon w/Clear Dome	MULTI
79075	LED Blue Beacon w/Clear Dome	MULTI
79074	LED Green Beacon w/Clear Dome	MULTI

Standards: SAE J845™ Class I (79071, 79073); Class II (79075); Not SAE approved (79074)
Volts / Amps: 12–24V / 0.6A at 12V, 0.3A at 24V
Lens: Internal clear lens 98251, Internal Amber Lens 98253, Internal blue lens 98255, External Clear Lens 98271
VMRS Code: 034-006-056

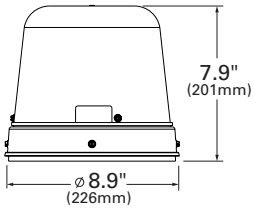

CLASSES I, II, & III – WHICH TO USE WHERE

CLASS I OPTICAL WARNING DEVICES

Primary optical warning devices for use on authorized emergency vehicles responding to emergency situations. These devices are used to capture the attention of motorists and pedestrians and warn of a potentially hazardous activity or situation.

Typical Usage
Fire, Police, Ambulance and Rescue vehicles – authorized vehicles that travel faster than the speed of traffic

CLASS II OPTICAL WARNING DEVICES

Primary optical warning devices for use on authorized maintenance or service vehicles to warn of traffic hazards such as a lane blockage or slow-moving vehicle.

Typical Usage
Utility, roadside assist vehicles, construction vehicles – Over-the-road vehicles traveling at the speed of traffic or stopped at the side of the road

CLASS III OPTICAL WARNING DEVICES

Primary optical warning devices for use on vehicles authorized to display an optical warning device for identification only.

Typical Usage
Forklifts, yard work machines

S-LINK™ TECHNOLOGY

S-Link™ System is a proprietary technology that will allow similar S-Link™ products to be synchronized. This allows for a user to define the flash patterns on multiple devices for a customized, tailored look on a vehicle. Note: Only S-Link™ compatible products can be synchronized to. Refer to user installation manuals for details on S-Link™ synchronization.

© 2019 All Rights Reserved, Grote® Industries, Inc.

LED

78053

78031

78045

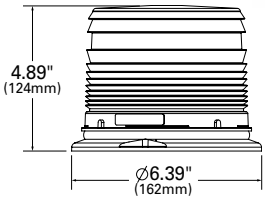

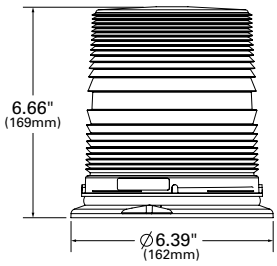

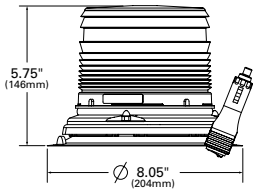

LED BEACON, CLASS I

12 different selectable flash patterns in either of two phases, plus steady-on • Circuit board is conformal coated to protect circuitry • S-Link™ System* synchronizing capabilities with up to six other units Allows for synchronization with other S-Link™ compatible products

78030	LED Beacon Amber LED Clear Short Dome	MULTI
78031	LED Beacon Clear Short Dome	MULTI
78032	LED Beacon Red Short Dome	MULTI
78033	LED Beacon Amber Short Dome	MULTI
78034	LED Beacon Green Short Dome	MULTI
78035	LED Beacon Blue Short Dome	MULTI
78050	LED Beacon Amber LED Clear Tall Dome	MULTI
78051	LED Beacon Clear Tall Dome	MULTI
78052	LED Beacon Red Tall Dome	MULTI
78053	LED Beacon Amber Tall Dome	MULTI
78054	LED Beacon Green Tall Dome	MULTI
78055	LED Beacon Blue Tall Dome	MULTI

MAGNET MOUNT WITH AUXILIARY ADAPTER:

78041	LED Beacon Clear Vac-Mount
78043	LED Beacon Amber Vac-Mount
78045	LED Beacon Blue Vac-Mount

Material: Polycarbonate
Standards: SAE J845™ Class I (78031, 78033, 78041, 78043, 78051, 78053)
Class II (78032, 78035, 78045, 78052, 78055)
Not SAE approved (78034, 78054)
Volts/Amps: 12–24V, 0.5A at 12V
Accessory: 6" Branch Guard 98460, 4" Branch Guard 98470
Lens: 98171, 98173, 98175, 98171, 98221, 98223, 98225, 98174, 98224
VMRS Code: 034-006-056

LED

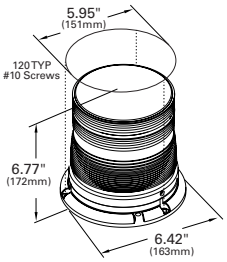

76253

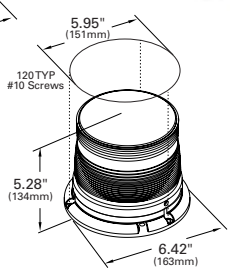

LED BEACON, CLASS I

Class I LED beacon is designed to provide optimal lighting for all application needs • Available in low- or high-dome options and 12-volt or 24-volt models • LED technology benefits also include low power draw and reduced on-going maintenance costs and downtime • Permanent mount

76253	LED Beacon Amber Short Dome	
76263	LED Beacon Amber Short Dome	24 VOLT
77953	LED Beacon Amber Tall Dome	
77963	LED Beacon Amber Tall Dome	24 VOLT

Material: Polycarbonate
Standards: SAE J845™ Class I
Volts / Amps: 12V / .5A, 1A max,
24V / .2A, .5A max
VMRS Code: 034-006-056

 © 2019 All Rights Reserved, Grote® Industries, Inc.

ROTOLED™ LED HYBRID BEACON, CLASS I

High-intensity LEDs in a rotating warning device with no gears, brushes or bulbs to wear out • Eight 3-watt LEDs with TIR optics produce an exceptionally bright warning device • Temperature range: -22°F to +122°F (-30°C to +50°C) • Polycarbonate lens with UV hard coating – reduces cracking/hazing/fading

76683 LED Rotating Beacon Amber Tall Dome MULTI
76685 LED Rotating Beacon Blue Tall Dome MULTI

Material: Polycarbonate
Standards: SAE J845™ Class I (Amber); Class II (Blue)
Volts / Amps: 12–24V / 1.7A
VMRS Code: 034-006-056

76683

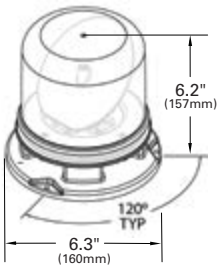

LED DUAL COLOR BEACONS, CLASS I

S-Link™ System* synchronizing capabilities with up to six other units Allows for synchronization with other S-Link™ compatible products • Change color selection with the flip of a switch • Circuit boards are conformal coated to protect circuitry • 3-hole permanent mount, 1" pipe mount

78070 LED Beacon Amber/Green Short Lens MULTI
78071 LED Beacon Amber/Clear Short Dome MULTI
78075 LED Beacon Amber/Blue Short Dome MULTI
78080 LED Beacon Amber/Green Tall Lens MULTI
78081 LED Beacon Amber/Clear Tall Dome MULTI
78085 LED Beacon Amber/Blue Tall Dome MULTI

Material: Polycarbonate
Standards: SAE J845™ Class I
not SAE approved (78080, 78070)
Volts / Amps: 12–24V / 0.6A at 12V
Accessory: 4" Branch Guard 98470; 6" Branch Guard 98460
Lens: 98171, 98221
VMRS Code: 034-006-056

78075

78081

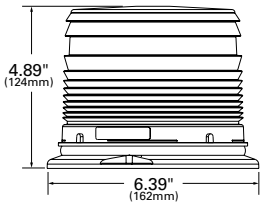

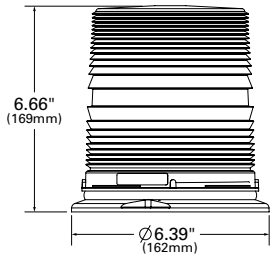

LED COMPACT BEACON, CLASS I

12 different selectable flash patterns plus steady-on • Permanent mount base with ½" pipe mount • SAE Class I beacon in a compact design

79093 LED Beacon, Amber, Compact Base 12–24V MULTI
98513 7909 Amber Replacement Lens

Material: Polycarbonate
Standards: SAE J845™ Class I
Volts / Amps: 12–24V / 0.5A at 12V
Lens: 98513
Bracket: 93604 - 1/2" Mirror Mounting Bracket
VMRS Code: 034-006-056

79093

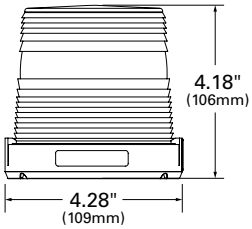

© 2019 All Rights Reserved, Grote® Industries, Inc.

LED

78863

78853

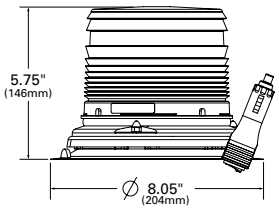

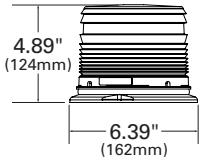

LED BEACONS, CLASS II, SHORT DOME

26 customer-selectable flash patterns, plus steady-on • Circuit board is conformal coated to protect circuitry • Permanent mount – Durable, lightweight polycarbonate base, flange 3-hole permanent mount, 1" pipe mount. • Vac-mount and Magnet Mount, durable, lightweight polycarbonate base, vacuum magnet mount with aux. Plug (on/off and pattern select switch)

78851	LED Beacon Clear Short Dome	MULTI
78853	LED Beacon Amber Short Dome	MULTI
78855	LED Beacon Blue Short Dome	MULTI

MAGNET MOUNT WITH AUXILIARY ADAPTER:

78861	LED Beacon Clear Vac-Mount
78863	LED Beacon Amber Vac-Mount
78865	LED Beacon Blue Vac-Mount

Material: Polycarbonate
Standards: SAE J845™ Class II (78851, 78853, 78861, 78863); Class III (78855, 78865)
Volts / Amps: 78851: 12–24V / 0.35A at 12V; 12V / 0.35A
Lens: 98221, 98223, 98225
VMRS Code: 034-006-056

LED

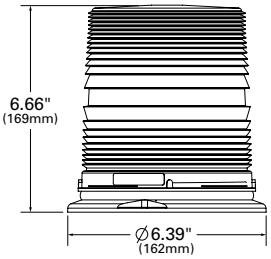

78063

LED BEACONS, CLASS II, TALL DOME

26 customer-selectable flash patterns, plus steady-on • Circuit board is conformal coated to protect circuitry • Durable, lightweight polycarbonate base, flange 3-hole permanent mount, 1" pipe mount

78061	LED Beacon Clear Tall Dome, Clear	MULTI
78063	LED Beacon Amber Tall Dome, Amber	MULTI
78065	LED Beacon Blue Tall Dome, Blue	MULTI

Material: Polycarbonate
Standards: SAE J845™ Class II
Volts / Amps: 12–24V / 0.35A at 12V
Accessory: 6" Branch Guard 98460
Lens: 98171, 98173, 98175
VMRS Code: 034-006-056

LED

77813

77833

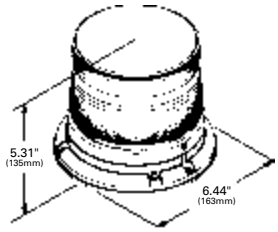

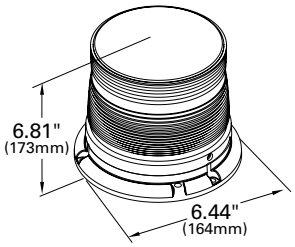

LED BEACON, CLASS II

Rated life of LED strobes is up to 50 times longer than standard strobes • SignalAlert provides greater visibility by creating a varied flash pattern vs. standard strobes with a consistent flash pattern • LED beacon design internally houses the flash control, eliminating the need for an external power supply or ballast • Scan-Lock™ flash pattern allows the user to manually select from 14 permanent flash patterns

77813	LED Beacon Amber Short Dome
77833	LED Beacon Amber Tall Dome

MAGNET MOUNT WITH AUXILIARY ADAPTER:

77823	LED Beacon Amber Short Dome
77843	LED Beacon Amber Tall Dome

Material: Polycarbonate
Standards: SAE J845™ Class II
Volts / Amps: 12V / .65A max
VMRS Code: 034-006-056

 © 2019 All Rights Reserved, Grote® Industries, Inc.

LED DIN MOUNT BEACONS, CLASS II

Lightweight and durable polycarbonate base with flexible DIN mount • Modular circuit completely encapsulated for increased shock/weather resistance • Quad flash pattern

78122	Red DIN Mount Beacon	MULTI
78123	Amber DIN Mount Beacon	MULTI
78125	Blue DIN Mount Beacon	MULTI

Material: Polycarbonate
Standards: SAE J845™ Class II (Amber, Blue); Class III (Red);
Volts / Amps: 12–24V / 0.4A at 12V
Mounting Stem: 43665
VMRS Code: 034-006-056

78123

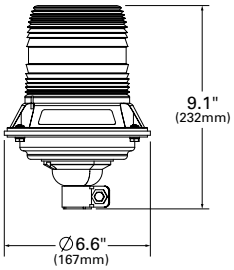

LED BEACONS, CLASS III

Circuit board is conformal coated to protect circuitry • Easy "Twist-off" lens for ease of replacement • Lightweight, durable polycarbonate base

78091	LED White Compact Perm Mount	MULTI
78092	LED Red Compact Perm Mount	MULTI
78093	LED Amber Compact Perm Mount	MULTI
78094	LED Green Compact Perm Mount	MULTI
78095	LED Blue Compact Perm Mount	MULTI

MAGNET MOUNT WITH AUXILIARY ADAPTER:

78101	LED White Compact Mag Mount
78102	LED Red Compact Mag Mount
78103	LED Amber Compact Mag Mount
78104	LED Green Compact Mag Mount
78105	LED Blue Compact Mag Mount

Material: Polycarbonate
Standards: SAE J845™ Class III (Amber Only)
Volts / Amps: 12–72V / 0.17A at 12V
Lens: 98283, 98284, 98285, 98281,98282
VMRS Code: 034-006-056

78093

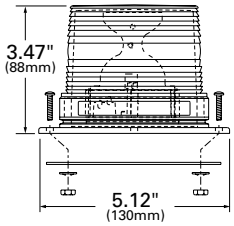

78103

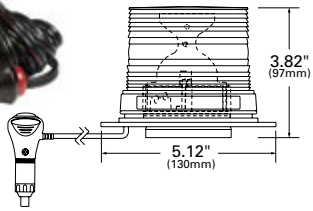

MIGHTY MINI LED BEACON, CLASS III

Rated life of LED strobes is up to 100 times longer than standard strobes • SignalAlert provides greater visibility by creating a varied flash pattern (vs. standard strobes with a consistent flash pattern) • Exclusive side-emitting LED technology rivals standard strobe intensity with a single super LED diode • LED beacon design internally houses the flash control, eliminating the need for an external power supply or ballast • 90 flashes per minute

77473	LED Amber Compact Perm Mount

MAGNET MOUNT WITH AUXILIARY ADAPTER:

77483	LED Amber Compact Mag Mount

Standards: SAE J845™ Class III
Material: Polycarbonate
Volts / Amps: 12V / .15A
VMRS Code: 034-001-021

77473

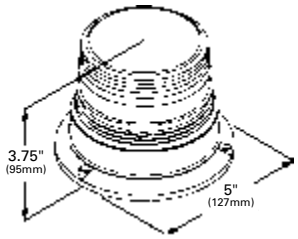

© 2019 All Rights Reserved, Grote® Industries, Inc.

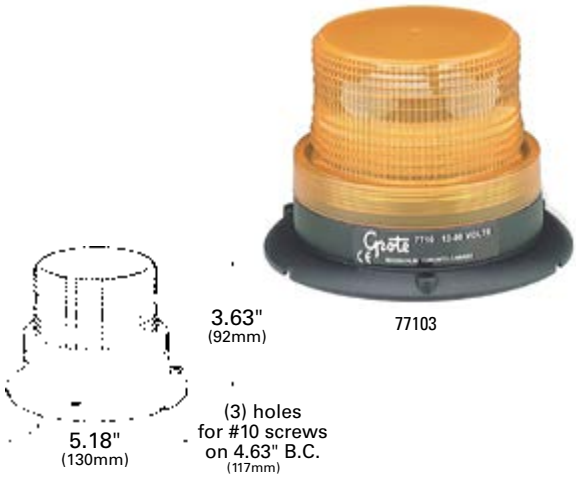

MIGHTY MINI STROBE

Rugged fiberglass-filled nylon base and polycarbonate lens • Wide voltage operating range • Field-replaceable lens and flash tube • Thread-on lens • 80 flashes per minute; 1.5 joules • Reverse polarity and voltage spike protected

SINGLE FLASH, PERMANENT MOUNT:

77101	White	MULTI
77102	Red	MULTI
77103	Amber	MULTI
77105	Blue	MULTI

Material: ABS / Polycarbonate
Volts / Amps: 11–80V / .25A at 12V
Accessory: Flash Tube: 92980
Lens: Amber 92033, 92031, 92032, 92035
VMRS Code: 034-001-063

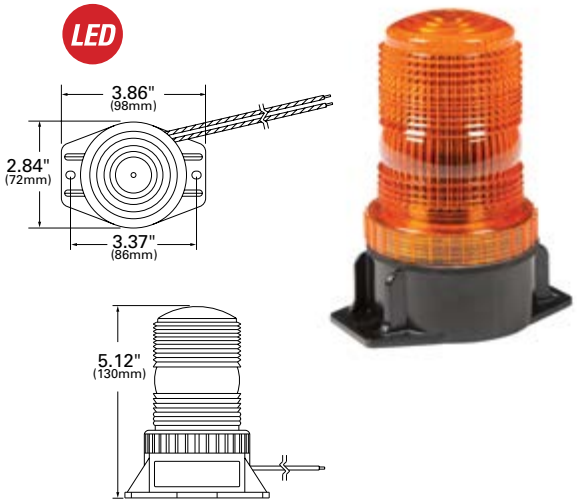

LED MATERIAL HANDLING BEACON, CLASS III

Compact and powerful LED light output • Easy twist-off lens for ease of replacement • Available flash patterns: single, double and quad • Rated life of LED strobes is up to 50 times longer than standard strobes.

78113 LED Amber Material Handling Beacon MULTI

Material: Polycarbonate
Standards: SAE J845™ Class III
Volts / Amps: 12–72V / 0.17A at 12V
Lens: 98293
VMRS Code: 034-001-063

MATERIAL HANDLING STROBE

Electronics sealed in epoxy to protect against dust, moisture and vibration • Thread-on lens for easy maintenance • Field-replaceable flash tube • 80 flashes per minute (single flash) • 2 joules per flash

77012	Red Material Handling Beacon	MULTI
77013	Amber Material Handling Beacon	MULTI

Material: Nylon / Polycarbonate
Volts / Amps: 12–110V / .6A at 12V
Accessory: Flash Tube: 92960
VMRS Code: 034-001-063

 © 2019 All Rights Reserved, Grote® Industries, Inc.

ECONOMY MATERIAL HANDLING STROBE

Thread-on lens for easy maintenance • Polycarbonate lens and fiberglass-filled nylon base • Reverse polarity and voltage spike protected • 45 lbs. pull magnet for temporary mounting with 12' adapter plug • 1.5 joules per flash, 70 flashes per minute (single flash) • Replaceable flash tube • Removable 1/2 hood included

77203 Amber Compact Mag Mount MULTI

Material: Polycarbonate
Volts / Amps: 12–80V / .3A at 12V
Accessory: Flash Tube: 92980
Lens: Amber 92033
VMRS Code: 034-001-063

360° PORTABLE BATTERY OPERATED LED WARNING LIGHT

24 ultra-bright LEDs help conserve battery life • 300–400 hours of operation on 2 D batteries (not included) • 60 triple flashes per minute
• Strong magnet base holds lamp in place on a metal surface
• Photocell adjust intensity for low-light situation

77912 Red
77913 Amber

Material: Nylon / Polycarbonate
VMRS Code: 034-001-021

LED

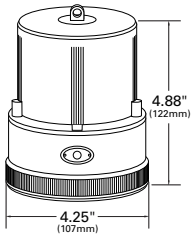

DIRECTIONAL, PORTABLE, BATTERY-OPERATED LED WARNING LIGHT

Push-button operation • 72 hours of operation on 2 AA batteries (not included) • Includes a magnetic base and is adjustable 180° • Additional reflective lens as added safety feature • 3 user-selectable flash patterns

77923 Amber

Material: Nylon / Polycarbonate
VMRS Code: 034-001-021

LED

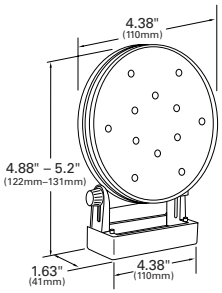

ECONOMY 360° FLASHING AUXILIARY WARNING LAMP KIT

For use when maximum warning is not required • Bright chrome-plated steel weather-proof base • 60–90 flashes per minute • Flasher can be bypassed for steady burn

76083 Amber

Material: Steel / Acrylic
Bulb: #1295, 50 CP
Volts / Amps: 12V / 3A
Lens: 90353
VMRS Code: 034-001-021

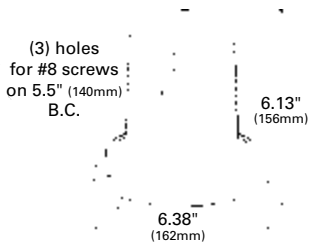

© 2019 All Rights Reserved, Grote® Industries, Inc.

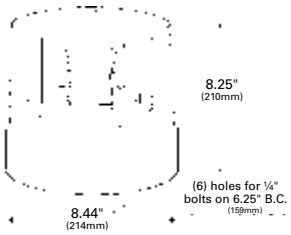

TWO SEALED-BEAM ROTO-BEACON, CLASS I

Clutched gear box is sealed and permanently lubricated • Revolves 360°, 60–120 flashes per minute

76223 Amber

Material: Stainless Steel / Aluminum / Acrylic / Polycarbonate
Bulb: 7400 SB, 33,000 CP
Standards: SAE J845™ Class I
Volts / Amps: 12V / 5.9A
Lens: 90373
VMRS Code: 034-006-056

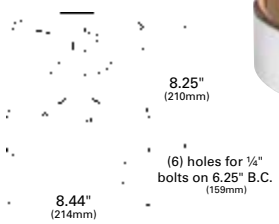

COMPACT FOUR SEALED-BEAM ROTO-BEACON, CLASS I

Clutched gear box design and "suitcase" latch design • Permanently lubricated sealed gear box • Revolves 360°, 60-120 flashes per minute

76203 Amber

Material: Stainless Steel / Aluminum / Acrylic / Polycarbonate
Standards: SAE J845™
Bulb: 7400 SB, 33,000 CP
Volts / Amps: 12V / 11.7A
Lens: 90373
VMRS Code: 034-006-056

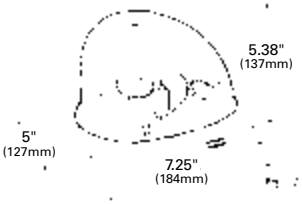

TEARDROP "KOJAK" LIGHT

Low-power consumption light • Auxiliary power plug with coiled cord • Magnetic mount

76033 Amber RETAIL

Material: Acrylic
Bulb: 67, 4 CP
Volts / Amps: 12V / 1.64A
VMRS Code: 034-001-021

 © 2019 All Rights Reserved, Grote® Industries, Inc.

LED MINI LIGHT BARS, CLASS I

LED

S-Link™ System* synchronizing capabilities with up to six other units • Allows for synchronization with other S-Link™ compatible products (Magnet Mount not S-Link™ compatible • Low profile reduces drag and friction • 20 customer selectable flash patterns via external pattern select wire

78020	LED Amber/Blue Minibar w/ Clear Lens	MULTI
78023	LED Amber Minibar	MULTI
78024	LED Green Minibar	MULTI
78025	LED Blue Minibar	MULTI
79053	LED Amber Minibar w/ Clear Lens	MULTI

MAGNET MOUNT WITH AUXILIARY ADAPTER:

78130	LED Amber/Blue Minibar Vac-Mount
78133	LED Amber Minibar Vac-Mount
78135	LED Blue Minibar Vac-Mount
78443	LED Amber Minibar Mag-Mount
79060	LED Amber Minibar w/ Clear Lens

Material: Polycarbonate
Standards: SAE J845™ Class I; not SAE approved (78024)
Volts / Amps: 12–24V / 2.3A at 12V
Lens: 98311, 98313, 98314, 98315
VMRS Code: 034-001-021

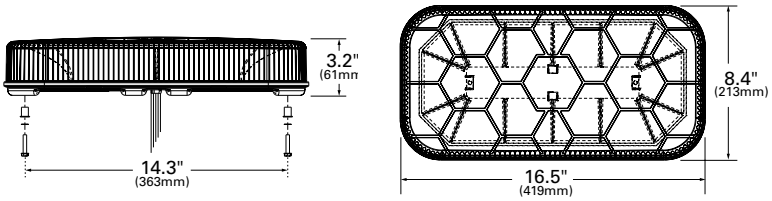

AMBER TOW BARS, CLASS I

LED

Built in stop/tail/turn functionality with rear-facing work lights (select models) • Ability to isolate extra bright front and rear amber LED modules with separate enable wires • 12 customer selectable flash patterns • Low profile design at 2 1/2" high • Includes simple bracket for permanent mounting or optional gutter kits are available for various makes and models of vehicles.

79153	58" Amber Towbar with S/T/T and Worklights
79143	51" Amber Towbar with S/T/T and Worklights
79133	51" Amber Towbar

Material: Aluminum base - Polycarbonate Lens
Standards: SAE J845™ Class I
Volts / Amps: 12V
Accessories: 98542 - Tow Bar Bracket for Spotlight, 98532 - Optional Roof Mount Bracket, 42400 - 4.6" Flex Gutter Kit, 42410 - 6.2" Flex Gutter Kit, 42420 - 8.4" Flex Gutter Kit
VMRS Code: 034-001-021

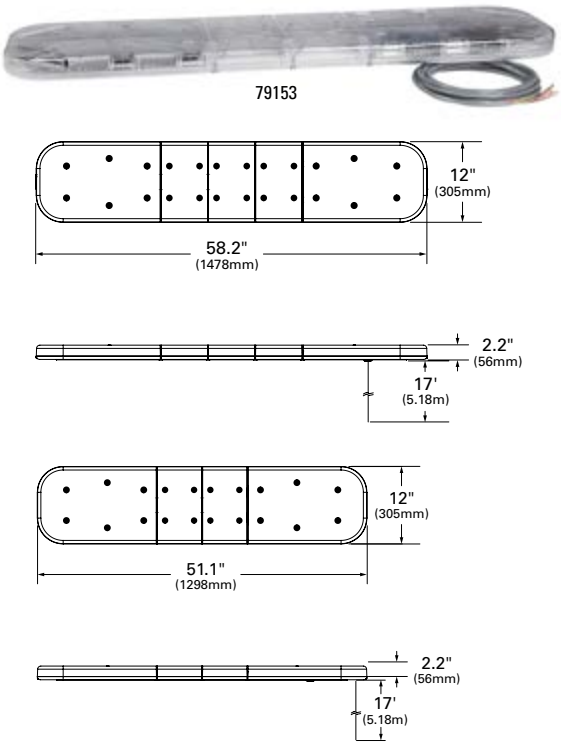

© 2019 All Rights Reserved, Grote® Industries, Inc.

LED

76983

76990

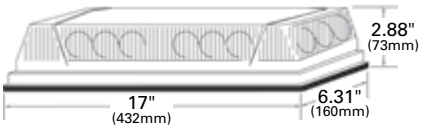

17" LOW-PROFILE LED MINI LIGHTBAR, CLASS I/II

Low profile provides high performance characteristics of LED lighting in a small size • 6 internal LED modules provide 360° light output • Built-in electronic flasher with 46 Scan-Lock™ flash patterns (30 for 76770, 76983, 76993) plus 4 simulated rotating patterns (permanent-mount version only) • Permanent mount includes 6" pigtail; magnetic mount includes 8' straight cord with accessory plug that includes LED indicator switch • Permanent mount on 14 1/16" x 3 7/16" hole centers • Mounting hardware and instructions included

PERMANENT MOUNT:

76983 Amber
76770 Amber/Blue, Clear Lens, Dual Function
76943 Amber, Clear Lens
76980 Amber/White Split LEDs / Clear Lens
76985 Blue

MAGNET MOUNT WITH AUXILIARY ADAPTER:

76990 Amber/White Split LEDs / Clear Lens
76993 Amber
76953 Amber, Clear Lens

Material: Polycarbonate
Standards: SAE J845 Class I (Amber); Class: II (Blue)
Volts / Amps: 12V / 3A peak / 1.2A avg
Lens: 99213
VMRS Code: 034-001-021

LED

77223

77803

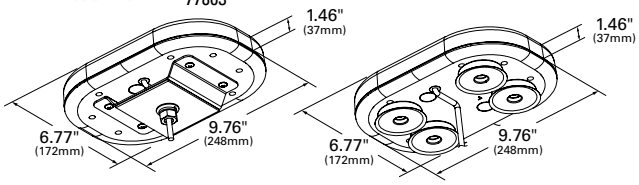

COMPACT MINI BAR ULTRA-LOW PROFILE, CLASS I

22 customer-selectable flash patterns via external pattern select wire on permanent models • Ultra-low profile reduces drag and friction • Magnetic mounted products come complete with an auxiliary power plug for on/off function and 22 user selectable flash patterns • Can be used in various applications such as pick-up trucks, cars or heavy duty vehicles.

77223 Single-Bolt Mount Bracket MULTI
77803 Magnet Mount MULTI

Material: Polycarbonate
Standards: SAE J845 Class I
Volts / Amps: 12–24V / 2.0A at 12V
VMRS Code: 034-001-021

LED

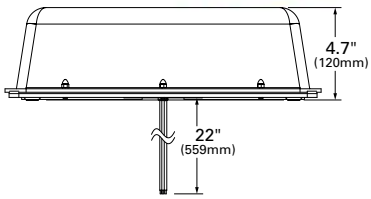

LED MINI STROBE LIGHT BARS, CLASS II

17 selectable flash patterns in either of two phases, or steady-on • Full gasket protects lamp internal components from dirt, grime and other contaminants

79043 LED Amber Dual Strobe Minibar MULTI

Material: Polycarbonate
Standards: SAE J845™ Class II
Volts / Amps: 12–24V / 0.8A at 12V
Lens: 98373, 98383
VMRS Code: 034-001-021

 © 2019 All Rights Reserved, Grote® Industries, Inc.

INCANDESCENT MINI LIGHT BARS, CLASS I

Gasket between lens and base for increased protection of internal components • Durable polycarbonate plastic base

78513 Amber Dual Rotator Minibar, Amber

Material: Polycarbonate
Standards: SAE J845™ Class I
Volta / Amps: 12V / 8A at 12V
Lens: 98373, 98383
VMRS Code: 034-001-021

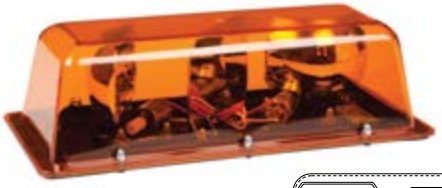

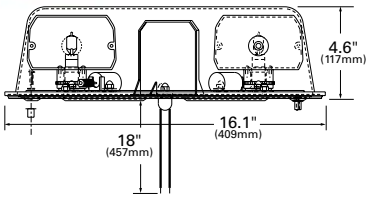

LED DIRECTIONAL WARNING LIGHTS, CLASS I/II

S-Link™ system synchronizing capabilities with up to six other units • Allows for synchronization with other S-Link™ compatible products • Ultra low profile; single and split color models • Robust design, die-cast aluminum base • 12 different selectable flash patterns in either of two phases, plus steady-on

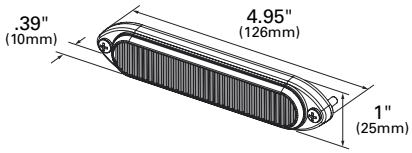

6-DIODE

78140	LED Amber/Green Directional	MULTI
78141	LED Clear Directional	MULTI
78142	LED Red Directional	MULTI
78143	LED Amber Directional	MULTI
78144	LED Green Directional	MULTI
78145	LED Blue Directional	MULTI
78146	LED Amber/Blue Directional	MULTI
78460	LED Amber/Clear Directional	MULTI
78460-5	LED Amber/Clear Directional	MULTI RETAIL
79080	LED Red/White Directional	MULTI

3-DIODE

78161	LED Clear Directional
78162	LED Red Directional
78163	LED Amber Directional
78163-1	Display pack (4 LED Amber 78163)
78164	LED Green Directional
78165	LED Blue Directional

Material: Die-cast Aluminum Base
Standards: SAE: J595™ Class I - 78141, 78142, 78143, 78145; Class II - 78146, 78460
Volts / Amps: 12–24V / 0.55A at 12V (78140, 78141, 78142, 78143, 78144, 78145, 78146, 78460); 12V / 0.3A at 12V (78161, 78162, 78163, 78164, 78165)
Accessory: (6-diode only) Chrome Bezel 98390, White Bezel 98400, License Bracket 98350, L Bracket 98360
VMRS Code: 034-001-021

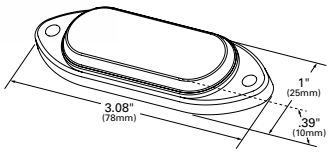

LED 6-DIODE TRI-COLOR DIRECTIONAL WARNING LIGHTS, CLASS I

18 different selectable flash patterns in either of two phases • 3 independent power wires give you the ability to control each color and pattern independently • Ultra-low-profile can be mounted to almost any flat surface • S-Link™ system synchronizing capabilities allows for synchronization with other S-Link™ compatible products.

79100	LED Amber/Blue/White Directional	MULTI
79110	LED Amber/Green/White Directional	MULTI
79120	LED Amber/Red/White Directional	MULTI

Material: Die-cast Aluminum Base
Standards: SAE J595™ Class I (Amber, Blue, Red and White colors only)
Volts / Amps: 12–24V / 0.8A at 12V
VMRS Code: 034-001-021

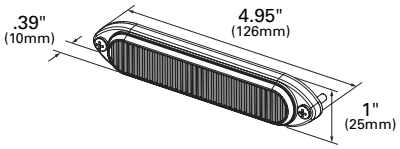

© 2019 All Rights Reserved, Grote® Industries, Inc.

LED

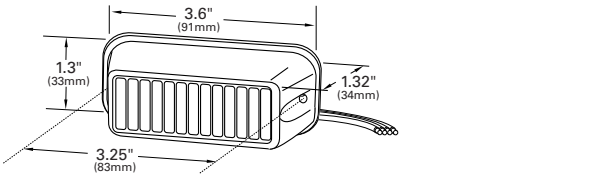

LED DIRECTIONAL WARNING LAMP, CLASS I

Versatile LED directional warning light can be synchronized with up to 8 interconnected modules and 25 different built-in flash patterns
- Fully encapsulated, sturdy polycarbonate construction coupled with a dependable gasket design ensures superb moisture and vibration resistance
- Self-contained high intensity, wide-angle LED module
- Horizontal/surface mount only

77461	Clear
77462	Red
77463	Amber
77465	Blue

Standards: SAE J845™ Class I
Material: Polycarbonate / Aluminum
Standards: SAE J595™ and J845™
Volts / Amps: 12V / .16A
VMRS Code: 034-001-021

LED

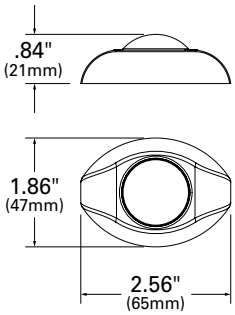

LED DIRECTIONAL WARNING LAMPS

S-Link™ system synchronizing capabilities with up to six other units
- Allows for synchronization with other S-Link™ compatible products
- Ultra low profile; Single and split color models • Robust design, die cast aluminum base • 12 different selectable flash patterns in either of two phases, plus steady-on

79033	Mini LED Amber W/Bezel	MULTI
79033-5	Mini LED Amber W/Bezel	MULTI RETAIL

Material: Die-cast Aluminum Base
Volts / Amps: 12–24V / 0.6A at 12V
VMRS Code: 034-001-021

LED

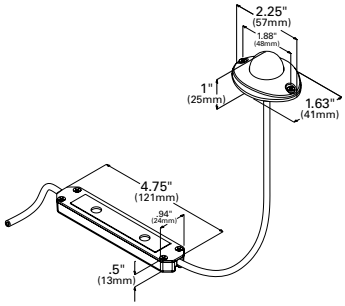

97942 Flange

97943 Flange

LED VERTEX HIDEAWAY WARNING LAMP, CLASS V

Ultra-small, self-contained, hemispheric LED light for surface or internal mount within composite headlight, cornering lights and tail light assemblies.
- Flange kit options (in black or chrome) allow easy surface mounting anywhere on your vehicle. • 25 Scan-Lock™ flash patterns include a synchronize feature for alternating and synchronous flashing of multiple lamps. • Simple installation; no separate lamp drivers, flashers, ballast or power supplies • 9-ft. cable length

77931	Clear
77932	Red
77933	Amber

Material: Polycarbonate / Aluminum
Standards: SAE J1113-41™ Class 5
Volts: 10–16V / .75A at 12V
Bracket: Black 97943, Chrome 97942
VMRS Code: 034-001-021

 © 2019 All Rights Reserved, Grote® Industries, Inc.

AUXILIARY LED WARNING LAMP, CLASS I

LED

4 high-power LEDs with 19 flash patterns • Synchronize option lets you connect multiple heads • Mount anywhere with adjustable bracket • Compact unit with robust aluminum housing for all types of 12V–24V application

76792	Red	MULTI
76793	Amber	MULTI
76793-5	Amber	MULTI RETAIL
76795	Blue	MULTI

Material: Aluminum
Standards: SAE J595™ Class I
Volts / Amps: 11–30V / .055A at 12V, .026 at 24V
VMRS Code: 034-001-021

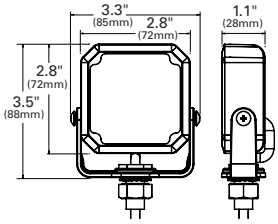

WING-TIP LED SNOWPLOW WARNING LAMP, CLASS I

LED

LED strobe light modules with 11 light patterns • Water proof TPR cabling w/ built-in strain relief connectors • Encapsulated housing resists vibration, water, salt and chemicals • When both lamps are used the set provides complete coverage whether snowplow blade is down and in use or in the stored travel position

78563	Horizontal
78573	Vertical

Material: Die-Cast Aluminum
Standards: SAE J845™ Class I
Volts / Amps: 12V / .6A
VMRS Code: 034-001-021

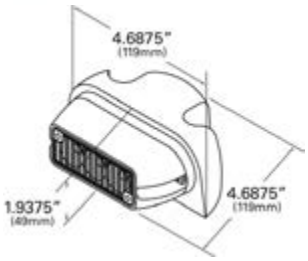

LED WARNING LAMP IN RUBBER HOUSING

LED

Durable rubber lamp housings • Versatile mounting (hardware included) • Molded UBS .180 bullet terminals • Pre-wired for quad or dual flash

77193	Amber

Material: Rubber / Polycarbonate / Acrylic
Standards: SAE J595™ Class II
Volts / Amps: 12V / .25A
Accessory: Lamp: Red 77352, Amber 77353, Blue 77355, Clear 77351; Housing 64930; Magnet Mount 43300
VMRS Code: 034-001-063

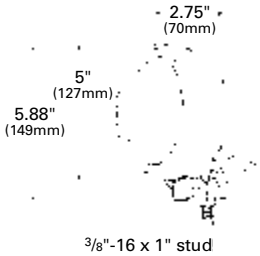

© 2019 All Rights Reserved, Grote® Industries, Inc.

LED

77353

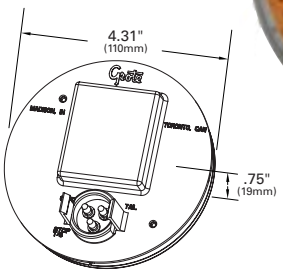

4" LED AUXILIARY WARNING LAMP, CLASS II/III

Encapsulant potting offers maximum protection of the circuit board against dirt, moisture and corrosion • Internal circuitry eliminates the need for an external power supply or control module • Functions as either a dual flash strobe or a quad flash strobe • Lamps mount in any orientation • Grote's rugged Plug-and-Go® terminals make for a quick, easy connection every time

77351	White
77352	Red
77353	Amber
77355	Blue

Material: Polycarbonate / Acrylic
Standards: SAE J595™ Class II (Red, Amber); Class III (Blue)
Volts / Amps: 12V / .25A
Bracket: 43253, 92510, 92512, 92513, 43572, 43642, 43655; Grommet: 91740, 91950; Pigtail: 66815, 66841, 67002, 66842, 67013, 66816, 66845, 67005, 66823, 66830, 67016, 66846
VMRS Code: 034-001-021

LED

77363

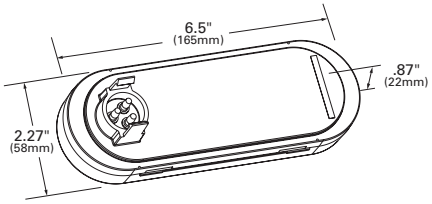

OVAL LED AUXILIARY WARNING LAMPS, CLASS II/III

Encapsulant potting offers maximum protection of the circuit board against dirt, moisture and corrosion • Internal circuitry eliminates the need for an external power supply or control module • Functions as either a dual-flash strobe or a quad-flash strobe • Lamps mount in any orientation • Grote's rugged Plug-and-Go® terminals ensure a quick, easy connections every time

77361	Clear
77362	Red
77363	Amber
77365	Blue

Material: ABS / Acrylic
Standards: SAE J595™ Class II (Red, Amber) quad; Class III (Blue, Amber) dual
Volts / Amps: 12V / .25A
Bracket: 43362, 43952, 43220, 43223, 43222, 43100;
Grommet: 92420, 92720
Pigtail: 66815, 66841, 67002, 66842, 67013
VMRS Code: 034-001-021

LED

78195

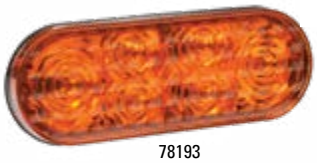

78193

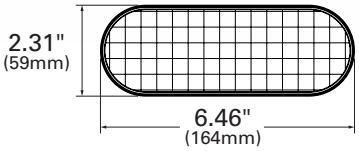

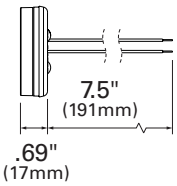

LED OVAL WARNING LAMP

S-Link™ system synchronizing capabilities with up to six other units • Allows for synchronization with other S-Link™ compatible products • Grommet mount can be converted to surface mount with optional chrome or black bezels • 12 different selectable flash patterns in either of 2 phases plus steady-on • Only .69" thick

78190	LED 6" Oval Amber/Blue, Clear Lens	MULTI
78191	LED 6" Oval Clear, Clear Lens	MULTI
78193	LED 6" Oval Amber, Amber Lens	MULTI
78194	LED 6" Oval Green, Clear Lens	MULTI
78195	LED 6" Oval Blue, Clear Lens	MULTI

Material: Polycarbonate
Standards: SAE J595™ Class I (78190, 78191, 78193, 78195); (Green not SAE approved)
Volts / Amps: 12–24V / 0.3A at 12V
Accessory: Black Bezel 98410, Chrome Bezel 98480
VMRS Code: 034-001-021

 © 2019 All Rights Reserved, Grote® Industries, Inc.

LED TRAFFIC STICKS, CLASS I

34 customer-selectable warning flash patterns plus 5 phase options • Made from durable extruded aluminum — will not warp or bend • Front load for easy replacement of individual heads • 20" model comes with a 2' three-wire cable (power, ground, pattern select) • 30" & 40" models come with a 25' six-wire cable, (power, ground, program wire, left enable, right enable, warn enable, center-out = L + R) • 30" & 40" models come with a 25' six wire cable, (power, ground, program wire, left enable, right enable, warn enable, center-out = L + R)

78370 LED Amber 20" Warning Stick
78380 LED Amber 30" Traffic Director
78410 LED Amber 40" Traffic Director

Material: Black Anodized Aluminum
Standards: SAE J595™ Class I; Green not SAE approved
Volts / Amps: 12V / 2A (78370)
12V / 6A (78380)
12V / 8A (78410)
Accessory: Replacement Modules - Amber 98343, 98345 Blue, 98341 White, 98342 Red, 98344 Green
VMRS Code: 034-001-021

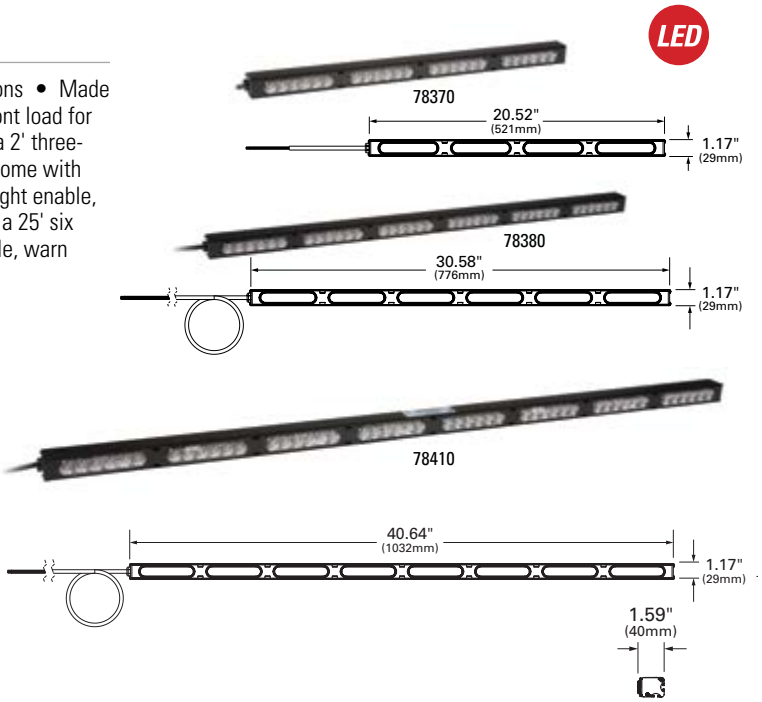

LED TRAFFIC DIRECTORS & ARROW STICKS

Made from durable extruded aluminum — Traffic Directors will not warp or bend • Front load for easy replacement of individual heads • Ships complete with backlit control unit, attached quick-disconnect wire harness (15' standard), L-brackets, hardware, and instructions

78200 LED Amber Traffic Director
78210 Small LED Amber Traffic Arrow
78270 Large LED Amber Traffic Arrow

Material: Black Anodized Aluminum
Volts / Amps: 12V / 2.4A (78200)
12V / 3.6A (78210)
12V / 4.8A (78270)
Accessory: Amber Module 98333, Control Box 98522, 10' Extension Cable 66650, 20' Extension Cable 66660, 40' Extension Cable 66670
VMRS Code: 034-001-021

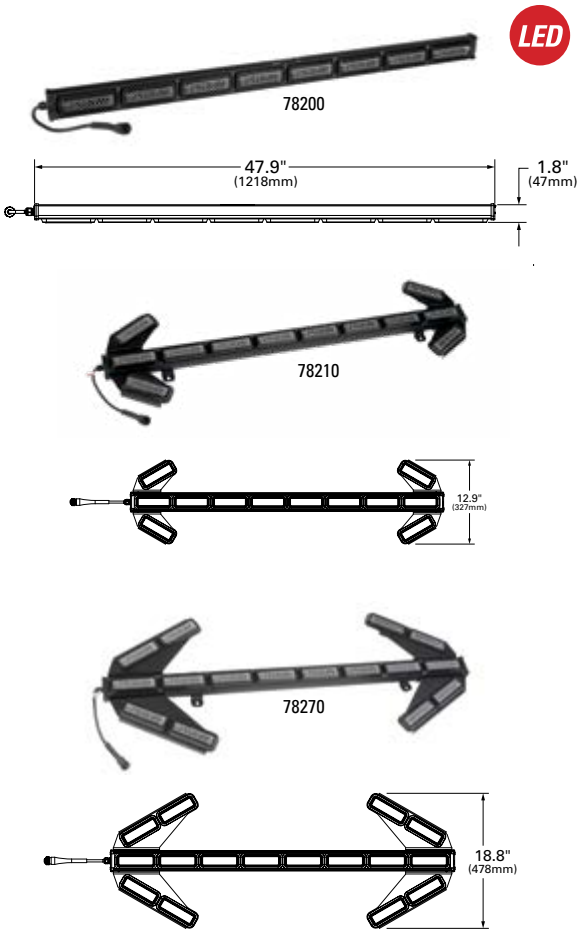

98522

66650

© 2019 All Rights Reserved, Grote® Industries, Inc.

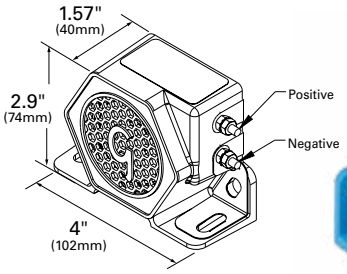

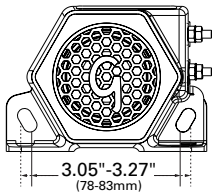

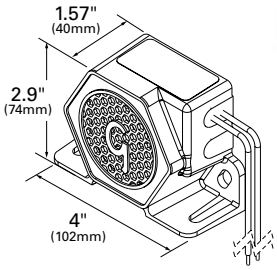

MEDIUM / LOW NOISE SURROUND BACK-UP ALARM

Electronics sealed in epoxy for protection against dust, vibration and moisture • Self-grounding, eliminates potential corrosion points • Universal integral mounting bracket • Voltage-spike and surge-protected

73040	97 dB, w/ Wire Studs	MULTI
73040-5	97 dB, w/ Wire Studs	MULTI RETAIL
73090	107 dB, w/ Wire Leads	MULTI
73110	82–102 dB	MULTI

Material: Glass-Filled Nylon with Wire Leads
Standards: SAE J994™ Type B (73090); Type C (73040); Type F (73110)
Finish: Blue
Volts / Amps: 12–24V / .4A at 12V
VMRS Code: 054-002-001

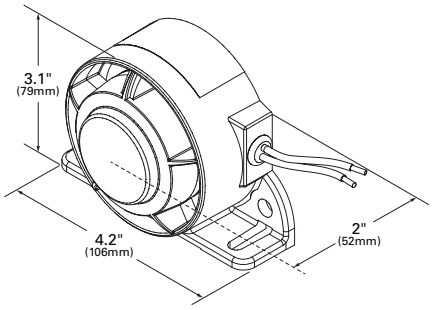

REVERSE MOUNTED SPEAKER BACK-UP ALARM

Features hardwire terminations • Integral mounting bracket • Electronics completely encapsulated in potting for total circuit board protection

73250	107 dB	MULTI
73240	81–107 dB	MULTI
73360	97dB Dual-Tone	MULTI
73370	102dB Dual-Tone	MULTI
73350	97dB Dual-Function	MULTI

Material: Glass-Filled Nylon
Standards: SAE J994™ Type B (73250); Type F (73240);
Type C (73350, 73360) Back-up function only;
Type B (73370) Back-up function only
Finish: Blue
Volts / Amps: 12–24V / 1.7A at 12V (73250)
12–24V / 3A at 12V (73240)
12–24V / .3A at 12V (73360)
12–24V / .7A at 12V (73370)
12–24V / .3A at 12V (73350)
VMRS Code: 054-002-001

 © 2019 All Rights Reserved, Grote® Industries, Inc.

REVERSE MOUNTED SPEAKER BACK-UP ALARM

• Rugged construction glass-filled nylon housings • Electronics sealed in epoxy for protection against dust, vibration and moisture • Universal mounting including grommet mounted products • Available in a range of decibel output levels to fit a wide variety of application needs

73030	107–112 Selectable dB	MULTI
73070	112 dB	MULTI
73080	87–112 dB, Self-Adjusting	MULTI

Material: Glass-Filled Nylon
Standards: SAE J994™ Type F (73080, 73030); Type A (73070)
Finish: Blue
Volts / Amps: 12–24V / .6A at 12V (73080, 73030)
12–24V / 0.3A at 12V (73070)
VMRS Code: 054-002-001

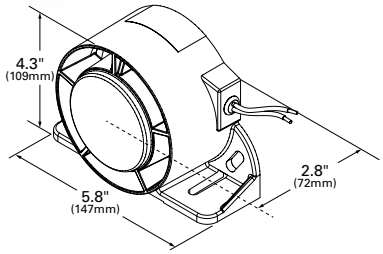

BACK-UP ALARMS – MULTI FREQUENCY

Select the right alarm that will best suit your unique environments
• Superior performance and protection from damage to the speaker due to its reverse mounted speaker

73170	107 dB, Multi-Freq	MULTI
73310	97 dB, Multi-Freq	MULTI

Material: Glass-Filled Nylon
Finish: Blue
Standards: SAE J994™ Type B (73170); Type C (73310)
Volts / Amps: 12–24V / 0.3A at 12V
VMRS Code: 054-002-001

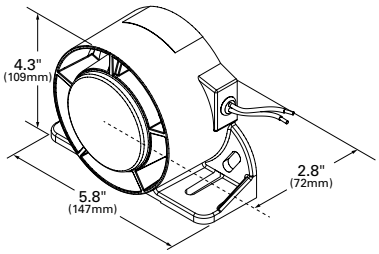

4" GROMMET MOUNTED BACK-UP ALARM

Mounts in standard 4" grommet (grommet not included) • Epoxy sealed to protect against dust, moisture, and vibration

73160	107 dB	MULTI
73220	97 dB	MULTI

Material: Glass-Filled Nylon
Standards: SAE J994™ Type B (73160); Type C (73220)
Finish: Black
Volts / Amps: 12–24V / .4A at 12V
Grommet: 91740
VMRS Code: 054-002-001

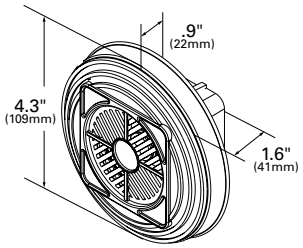

© 2019 All Rights Reserved, Grote® Industries, Inc.

ELECTRIC AUTOMOTIVE HORNS

Complete with mounting bracket

FOR IMPORT VEHICLES:

72010-5 High Tone, 135 dB RETAIL

FOR DOMESTIC VEHICLES:

72100-5 High Tone, 125 dB RETAIL
72110-5 Low Tone, 125 dB RETAIL

Material: Steel
Standards: SAE J377™
Finish: Black Enamel
Volts / Amps: 12V
VMRS Code: 054-001-001

BEEPING BACK-UP HALOGEN BULB

Combination audible back-up safety device and lamp in one • Provides a clear beeping sound when vehicle shifts into reverse gear • Alarm does not meet OSHA and SAE J994™ requirements for commercial back-up alarms

BAYONET BASE: (1156 REPLACEMENT)

73140-5 RETAIL

WEDGE BASE: (3156 REPLACEMENT)

73150-5 RETAIL

Volts / Amps: 12V / 1.67A
VMRS Code: 054-002-001

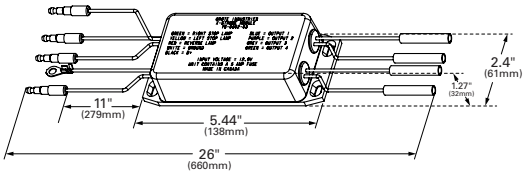

STROBE POWER MODULE

The Grote® 99630 "X" control strobe module is ideal for use on refuse and waste management vehicles, yard work machines and construction vehicles using a 12V power system wherever a strobing "X" pattern is desired • This module will provide the necessary strobing functionality with both LED oval and round lamp systems. • The system utilizes Grote® designed and built circuitry for optimum signal management • Unit is designed with over-voltage circuit protection and signal and back-up over-rides turn strobe function off when the back-up, left and right turn signals are engaged

99630 Strobe Power Module

Material: Polycarbonate
Strobe Function: 'X' Pattern function
Input Voltage: 12.8V
Dimensions: 1.265" high x 5.44" long
Max amp draw: Unit contains a 5 AMP fuse
VMRS Code: 034-002-001

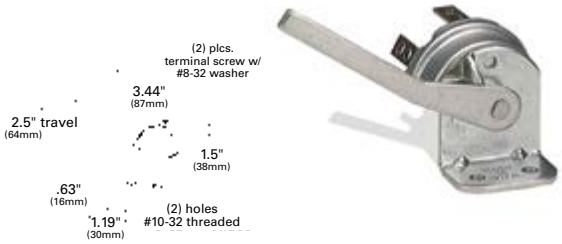

ACTUATION SWITCH

Often utilized with back-up alarms • Activates when shifting vehicle into reverse

44134 Switch MULTI

Material: Steel
Finish: Zinc Plate
Volts / Amps: 12–36V / 5A max
VMRS Code: 034-004-081

 © 2019 All Rights Reserved, Grote® Industries, Inc.

ACTUATION SWITCH

Heavy-duty usage • Mechanical actuation • Includes mounting bracket and weather-proof compression fitting

44421 Switch MULTI

Material: Steel
Finish: Zinc
Volts / Amps: 12–80V / 10A max
VMRS Code: 034-003-018

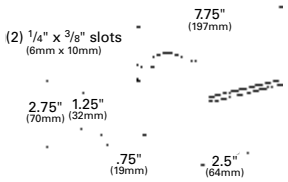

REPLACEMENT LENSES

LENS MODEL NUMBER	FITS LAMP
90353	76083
90373	76203
	76223
	76283
98171	**78050**
	78051
	78061
	78080
	78081
	78085
98173	78053
	78063
	78503
98175	78055
	78065
98221	78030
	78031
	78041
	78070
	78071
	78075
	78851
	78861
	78015
98223	78033
	78043
	78493
	78853
	78863

LENS MODEL NUMBER	FITS LAMP
98225	78035
	78045
	78855
	78865
98251	78010
	78011
	79021
98253	78013
	79023
98255	78015
	79025
98271	78010
	78011
	78013
	78015
	79070
	79071
	79072
	79073
	79074
98283	78093
	78103
98284	78094
	78104
98285	78095
	78105
98281	78091
	78101

LENS MODEL NUMBER	FITS LAMP
98282	78092
	78102
98293	78113
98311	78020
	78130
	79053
	79060
98313	78023
	78133
	78443
98314	78024
98315	78025
	78135
98373	78513
	79023
	79043
98383	79023
	79043
98513	79093

90353

90373

98171, 98173, 98175

98221, 98223, 98225

98251, 98253, 98255

98271

98281, 98282, 98283, 98284, 98285

98293

98311, 98313, 98314, 98315

98373

98383

98513

S-Link™ is a trademark of Star1889 Headlight & Lantern Co.; Scan-Lock™ is a trademark of Whelen Engineering

All product and company names are trademarks™ or registered® trademarks of their respective holders. Use of them does not imply any affiliation with or endorsement by them.

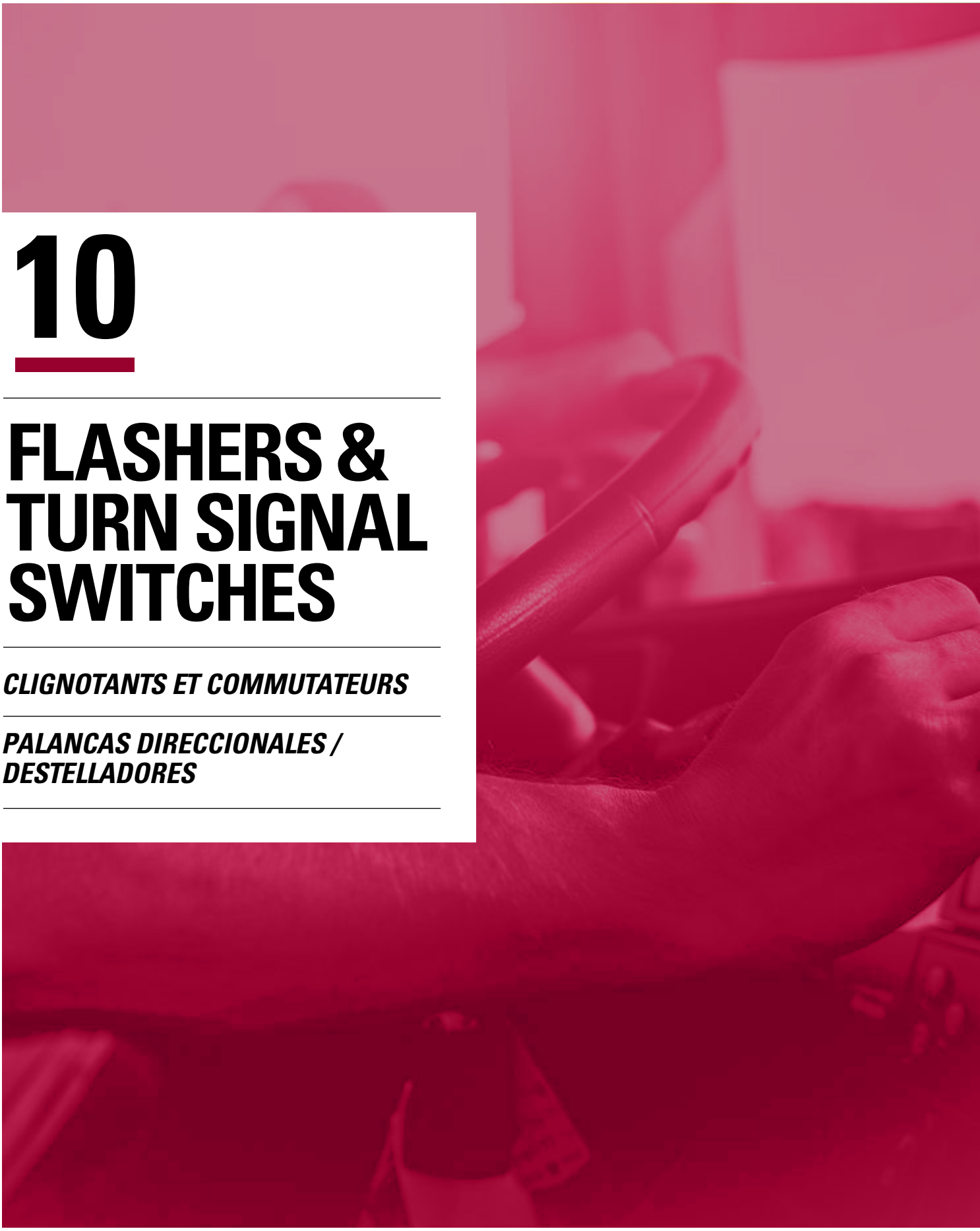

10

FLASHERS & TURN SIGNAL SWITCHES

CLIGNOTANTS ET COMMUTATEURS

PALANCAS DIRECCIONALES / DESTELLADORES

 © 2019 All Rights Reserved, Grote® Industries, Inc.

VARIABLE-LOAD ELECTRONIC LED FLASHER

60–120 flashes per minute • Heavy-duty contacts; external wire provides ground • Steady flash rate for all LED and incandescent loads • Flash rate is electronically controlled

3 TERMINAL (PILOT):

44890 Flasher

2 TERMINAL:

44891 Flasher

Regulations / Standards: FMVSS 108 / SAE J945™, J590™
Volts / Amp: 12V / 1–20A; 1–10 Lamp Load (Incandescent)
VMRS Code: 034-003-018

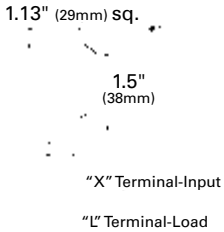

3-PIN LED FLASHER

3-pin electronic LED flasher, 12-Volt • Max load: 20 amps • Min Load: .25 amps • Flash rate: 60–120 flashes per minute

44110 Flasher

Regulations / Standards: FMVSS 108 / SAE J945™, J590™
Volts / Amp: 12V / .25–20A
VMRS Code: 034-003-018

5-PIN ELECTRONIC LED FLASHER

Direct replacement for OE flasher • Doesn't require a separate ground wire; uses factory wiring • Provides a steady flash rate for turn signals and hazard lamps even when using LED lamps • Electronically controlled flash rate, maintains the legally compliant flash rate

5 PIN:

44090 ISO Terminals

Regulations / Standards: FMVSS 108 / SAE J945™, J590™
Volts / Amp: 12V / 1–20A
VMRS Code: 034-003-018

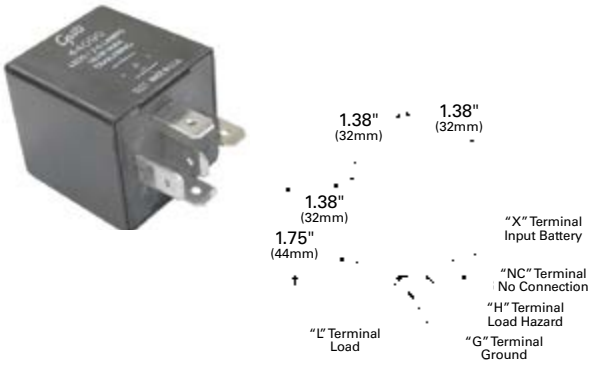

10-LAMP ELECTROMECHANICAL FLASHER

Molded base and terminals • Heavy-duty contacts • 60–120 flashes per minute

2 TERMINAL:

44810 Flasher
44810-5 Flasher RETAIL

3 TERMINAL (PILOT):

44820 Flasher

Regulations / Standards: FMVSS 108 / SAE J945™, J590™
Volts / Amp: 12V / 2–20A; Lamp Load: 1–10 lamps
VMRS Code: 034-003-018

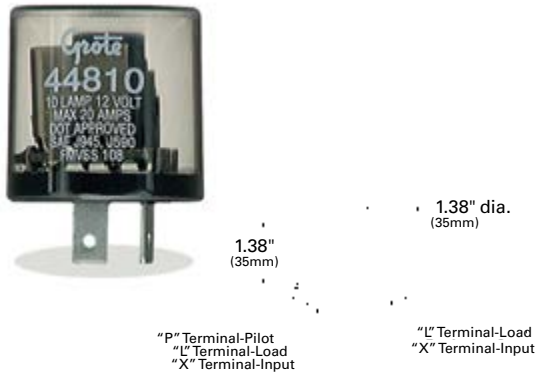

© 2019 All Rights Reserved, Grote® Industries, Inc.

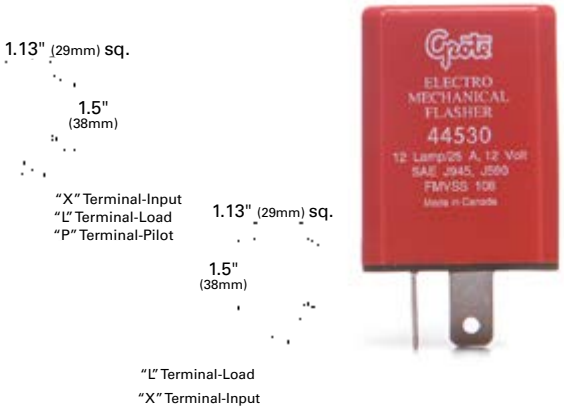

12-LAMP ELECTROMECHANICAL FLASHER

60–120 flashes per minute • Available in standard 12-Volt and 24-Volt models • Less than 4mV per amp voltage drop • Exceeds SAE 100-hour test • Fits in a round flasher socket

2 TERMINAL:

44530 Flasher
44530-5 Flasher RETAIL
44850 Flasher 24 VOLT

3 TERMINAL (PILOT):

44540 Flasher
44860 Flasher 24 VOLT

Regulations / Standards: FMVSS 108 / SAE J945™, J590™
Volts / Amp: 12V / 2–25A; Lamp Load: 1–12 lamps
VMRS Code: 034-003-018

16-LAMP ELECTRONIC FLASHER

60–120 flashes per minute • 11–15-Volts DC • Less than 4mV per amp voltage drop • Exceeds SAE 100-hour test • Fits in a round flasher socket

2 TERMINAL:

44690 Flasher

3 TERMINAL (PILOT):

44700 Flasher

Regulations / Standards: FMVSS 108 / SAE J945™, J590™
Volts / Amp: 12V / 2–33A; Lamp Load: 1–16 lamps
VMRS Code: 034-003-018

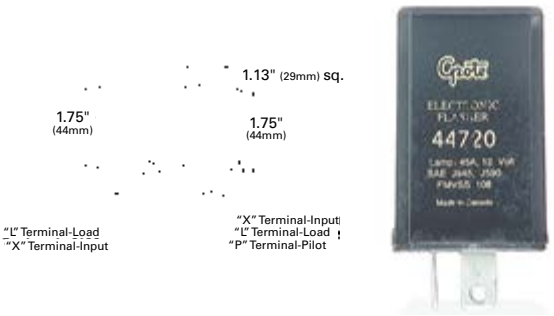

20-LAMP HEAVY DUTY ELECTRONIC FLASHER

60–120 flashes per minute • 11–15-Volts DC • Less than 3mV per amp voltage drop • Fits standard round socket • Exceeds SAE 100-hour test

2 TERMINAL:

44710 Flasher

3 TERMINAL:

44720 Flasher

Regulations / Standards: FMVSS 108; SAE J945, J590
Volts / Amp: 12V / 2–42A; Lamp Load: 1–20 lamps
VMRS Code: 034-003-018

NORTH AMERICAN (JSO) PINOUT

Heavy-duty contacts • Flash rate electronically timed • Fits most Dodge®, Ford®, Honda®, Mitsubishi®, Nissan®, and Subaru® vehicles (see application guide) • Steady flash rate for all incandescent and LED leads

3 TERMINAL:

44892 Flasher

Regulations / Standards: FMVSS 108 / SAE J945™, J590™
Volts / Amp: 12V / 1–20A; Lamp Load: 1–10 Lamps
VMRS Code: 034-003-018

 © 2019 All Rights Reserved, Grote® Industries, Inc.

6-LAMP HEAVY-DUTY ALTERNATING ELECTRONIC FLASHER

11–15-Volts DC • Less than 4mV per amp voltage drop

3 TERMINAL:

44730 Flasher

Regulations / Standards: FMVSS 108 / SAE J945™, J590™
Volts / Amp: 12V / 25A; Lamp Load: 1–10 lamps
VMRS Code: 034-003-018

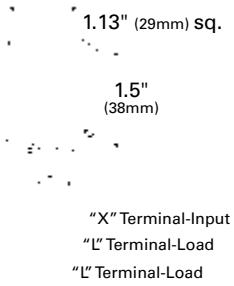

NON-LATCHING HEADLAMP DIMMER RELAY

Used for converting from floor-mounted dimmer switch to turn signal switch with lift-to-dim feature • Heavy-duty contact design provides years of trouble-free operation

44460 Relay

Volts / Amp: 12V / 20–30A capacity
VMRS Code: 034-003-018

24 TO 12 VOLT CONVERTER

Allows use of 12-Volt lighting/accessories on 24-Volt vehicles • Rugged die-cast housing • Solid-state, fully potted electronics

44070 Converter MULTI

Material: Aluminum
Finish: Bright
Volts / Amp: 18–32V input, 13.8V output / 3A max
VMRS Code: 034-003-018

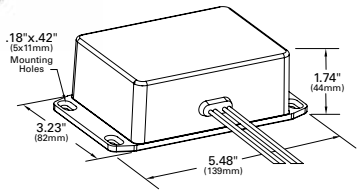

SOLID-STATE ELECTRONIC FLASHER

Designed for use with LED lighting • Provides steady flash rate over any load up to 12 amps • Fully-potted, solid-state electronics • Self-resetting feature provides internal protection against short circuits

44010 3-Wire MULTI
44030 Alternating Flasher MULTI

Material: Aluminum
Finish: Black
Regulations / Standards: FMVSS 108 / SAE J945™, J590™
Volts / Amp: 12–24V / 12A max (44030: 6A per side)
VMRS Code: 034-003-018

44010

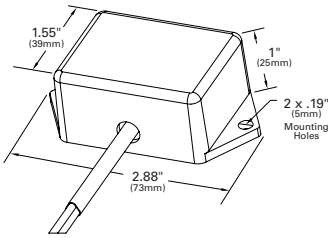

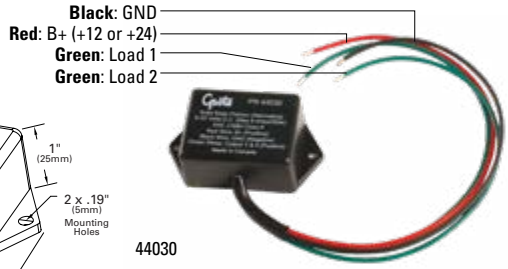

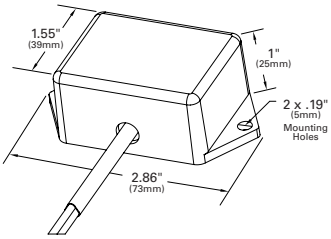

44030

© 2019 All Rights Reserved, Grote® Industries, Inc.

FLASHER APPLICATION GUIDE

Variable-load flashers may not have lamp outage indicators and may continue to flash at a normal rate even though one or more bulbs have failed. Inspect your lighting system frequently and replace any burned-out bulbs immediately. These flashers are designed for heavy-duty or trailer load applications.

Acura®

Year	Vehicle / Model	Exceptions	Part
1991-1986	Legend		44810
1997-1986	All others	CL, NSX, RL	44892

AMC®

Year	Vehicle / Model	Exceptions	Part
1988-1975	All		44810

BMW®

Year	Vehicle / Model	Exceptions	Part
1974-1976	All		44820

Buick®

Year	Vehicle / Model	Exceptions	Part
1996-1992	Century		44810
1990-1985	Electra		44810
1997	LeSabre		44810
1997	Riviera		44810

Cadillac®

Year	Vehicle / Model	Exceptions	Part
1993-1970	All	Allante, 1993 El Dorado and older	44810
1997-1994	All	others below	44892
1999-1989	Seville and STS	1990 Seville	44892
1997-1994	Catera		44810
1997-1994	Fleetwood		44810
1996-1970	All	1996 Skylark	44810

Chevrolet® / GMC®

Year	Vehicle / Model	Exceptions	Part
Pre-1997	2-Terminal Flasher	others if noted below	44810
Pre-1993	3-Terminal Flasher, Commercial Trucks Only		44540
1988-1987	Spectrum		44892
1988-1987	Sprint		44892
1993-1992	Vans with tow package		44530

Chrysler®

Year	Vehicle / Model	Exceptions	Part
	2-Terminal Flasher		44810
	5-Terminal Flasher		44090

Daihatsu®

Year	Vehicle / Model	Exceptions	Part
1992-1984	All	Rocky	44892

Dodge®

Year	Vehicle / Model	Exceptions	Part
	2-Terminal Flasher	others noted below	44810
1995-1970	All Cars	Monaco, Raider, 1985 Ram Van Wagon and Pickup	44810
1996-1986	Colt		44892
1993-1983	Ram 50		44892
1996-1986	Stealth		44892

Eagle®

Year	Vehicle / Model	Exceptions	Part
1989-1988	Medallion		44820
1996-1994	Summit		44892
1996-1992	Summit Wagon		44892
1993-1990	Talon		44892

Fiat®

Year	Vehicle / Model	Exceptions	Part
1983-1970	All		44820

Ford®

Year	Vehicle / Model	Exceptions	Part
	2-Terminal Flasher		44810
Pre-1993	3-Terminal Flasher, Commercial Trucks Only		44540
	3-Terminal Flasher		44892
	5-Terminal Flasher		44090
1997-1972	E-Series Truck		44530
1964	Thunderbird		44820

GMC®

Year	Vehicle / Model	Exceptions	Part
1991-1978	All		44810

Geo

Year	Vehicle / Model	Exceptions	Part
1996-1989	Metro		44892
1989	Spectrum		44892
1993-1990	Storm		44892
1995-1989	Tracker		44892

Honda®

Year	Vehicle / Model	Exceptions	Part
	2-Terminal Flasher		44810
	3-Terminal Flasher		44892
1981-1976	Accord		44810

Hyundai®

Year	Vehicle / Model	Exceptions	Part
1995-1989	All		44892

Infiniti®

Year	Vehicle / Model	Exceptions	Part
1996-1990	All	1996 I30	44892

International®

Year	Vehicle / Model	Exceptions	Part
1980-1974	All		44810

Isuzu®

Year	Vehicle / Model	Exceptions	Part
2004-1987	All		44892

Jaguar®

Year	Vehicle / Model	Exceptions	Part
1996-1978	XJ6, XJS, XJ12		44820
1989-1986	XJ6, XJS		44892

Jeep®

Year	Vehicle / Model	Exceptions	Part
1997-1994	Grand Cherokee		44090
1996-1978	All	1993 Grand Wagoneer, 1996 Grand Cherokee, 1986 CJ and Scramble	44810

 © 2019 All Rights Reserved, Grote® Industries, Inc.

Lincoln®

Year	Vehicle / Model	Exceptions	Part
	2-Terminal Flasher		44810
	3-Terminal Flasher		44892
	5-Terminal Flasher		44090

Mazda®

Year	Vehicle / Model	Exceptions	Part
1984-1971	2-Pin		44180

Mercury®

Year	Vehicle / Model	Exceptions	Part
	2-Terminal Flasher		44810
	3-Terminal Flasher		44892
	5-Terminal Flasher		44090

Mitsubishi®

Year	Vehicle / Model	Exceptions	Part
	2-Terminal Flasher		44810
	3-Terminal Flasher	others noted below	44892

Nissan®

Year	Vehicle / Model	Exceptions	Part
	2-Terminal Flasher		44810
	3-Terminal Flasher		44892

Oldsmobile®

Year	Vehicle / Model	Exceptions	Part
	2-Terminal Flasher		44810
	5-Terminal		44090

Peugeot®

Year	Vehicle / Model	Exceptions	Part
1991-1982	All		44820

Plymouth®

Year	Vehicle / Model	Exceptions	Part
1991-1975	All		44810

Pontiac®

Year	Vehicle / Model	Exceptions	Part
	2-Terminal Flasher		44810
	5-Terminal		44090
1991-1989	LeMans		44892

Porsche®

Year	Vehicle / Model	Exceptions	Part
	2-Terminal Flasher	others noted below	44810
1986-1978	924 (Hazard Flasher)		44820
1982-1978	928 (Hazard Flasher)		44820
1986-1978	944 (Hazard Flasher)		44820

Renault®

Year	Vehicle / Model	Exceptions	Part
1986-1983	2 Pin		44810
1986-1983	3 Pin		44820
1980-1978	All (Hazard Flasher)		44820
1985-1982	Alliance		44810
1985-1984	Encore		44810
1985-1982	Fuego		44820

SAAB®

Year	Vehicle / Model	Exceptions	Part
1980-1978	99 and 99GL		44892
1981	900		44892
1999	Sonett		44820
1975-1974	All		44820

Subaru®

Year	Vehicle / Model	Exceptions	Part
	2-Terminal Flasher		44810
	3-Terminal Flasher		44892

Suzuki®

Year	Vehicle / Model	Exceptions	Part
	All		44892

Toyota®

Year	Vehicle / Model	Exceptions	Part
1980-1978	Cresida		44892
1980-1978	Land Cruiser		44810
1997	Previa		44892

Triumph®

Year	Vehicle / Model	Exceptions	Part
1982-1970	All (Turn Flasher)		44810
1982-1970	All (Hazard Flasher)	44820	

Yugo®

Year	Vehicle / Model	Exceptions	Part
	All		44820

© 2019 All Rights Reserved, Grote® Industries, Inc.

UNIVERSAL 7-WIRE / 4-WIRE TURN SIGNAL SWITCH KIT

Replaces Truck-Lite® and Signal-Stat® 900-902, 920 and 2900-3 • Includes switch, mounting hardware and 24" blunt-cut harness • 4- or 7-wire system • Adapts to applications without brake override functions • For applications with floor-mounted dimmer switch • 18-bulb capacity makes switch ideal for triple trailer configurations • Compatible with 24-Volt systems if indicator bulb is replaced with Grote's 24V bulb (1450) • Mounting hardware kit includes threaded inserts with screws for mounting to existing brackets and a worm gear clamp with a range of 1.6" to 2.5" for mounting to circular column tubes

48072 Turn Signal Switch Kit

Regulations / Standards: FMVSS 108 / SAE Q
Finish: Black
Bulb: (Indicator) 53, 1 CP
Voltage/Amp: 12V / .12A
Accessory: Switch: 48272; Harness: 69680
VMRS Code: 034-003-016

UNIVERSAL TURN SIGNAL SWITCH

Universal replacement without high-low beam function • 18-bulb capacity makes switch ideal for triple-trailer configurations • Mounting hardware kit includes tapped inserts with screws for mounting to existing brackets and a worm gear clamp with a range of 1"–2.5" for mounting to circular column trucks • Integral RH and LH turn/hazard indicator lights • Adapts to applications without brake override functions • Compatible with 24-Volt systems if indicator bulb is replaced with Grote's 24V bulb (1450)

48272 Turn Signal Switch

Regulations / Standards: FMVSS 108 / SAE Q
Finish: Black
Bulb: (Indicator) 53, 1 CP; Voltage/Amp: 12V / .12A
Accessory: Harness: 69680
VMRS Code: 034-003-016

UNIVERSAL TURN SIGNAL SWITCH WITH LIFT-TO-DIM

18-bulb capacity makes switch ideal for triple-trailer configurations • Mounting hardware kit includes tapped inserts with screws for mounting to existing brackets and a worm gear clamp with a range of 1"–2.5" for mounting to circular column trucks • Adapts to applications without brake override functions

48282 Universal Turn Signal Switch

Regulations / Standards: FMVSS 108 / SAE Q
Finish: Black
Accessory: Harness: 69690
VMRS Code: 034-003-016

 © 2019 All Rights Reserved, Grote® Industries, Inc.

UNIVERSAL REPLACEMENT HARNESS

Fits 48272 switch • Overall length of 24" is sufficient for most applications • Flexible, black PVC loom adds protection without adding rigidity • 4- to 7-wire system compatible • Includes circuitry for switches with integral RH and LH turn/hazard indicator light

69680 Universal Harness

VMRS Code: 034-003-016

UNIVERSAL PLUG-IN WIRING HARNESS WITH LIFT-TO-DIM

Fits 48282 switch • Includes 44460 non-latching relay • Includes connector for headlamp relay • 4- to 7-wire system compatible • Overall length of 24" is sufficient for most applications • Flexible, black PVC loom adds protection without adding rigidity

69690 Universal Harness

VMRS Code: 034-003-016

FREIGHTLINER® AND KENWORTH® OEM REPLACEMENT SWITCH WITH HARNESS

Replaces Freightliner® GRO 01-4811-87, Grote® 01-4811-87, and Paccar® K301-295-3 • Black worm gear mounting clamp included • OEM-style, 20" plug-in wiring harness included • 18-bulb capacity makes switch ideal for triple-trailer configurations

48532 Turn Signal Switch Kit

Regulations / Standards: FMVSS 108 / SAE Q
Finish: Black
VMRS Code: 034-003-016

FREIGHTLINER® OEM REPLACEMENT SWITCH

Replaces Freightliner® GRO 01-4811-77 • 18-bulb capacity makes switch ideal for triple-trailer configurations • Plugs into OE harness on truck • Mounts with a separate worm gear clamp

48522 Turn Signal Switch Kit

Regulations / Standards: FMVSS 108 / SAE Q
Finish: Black
VMRS Code: 034-003-016

© 2019 All Rights Reserved, Grote® Industries, Inc.

OEM-STYLE TURN SIGNAL SWITCH

Replaces Freightliner® GRO 01-4813-80 and GRO 01-4813-81 • 18-bulb capacity makes switch ideal for triple-trailer configurations • Mounting bracket included

48552 Turn Signal Switch

Regulations / Standards: FMVSS 108 / SAE Q
Finish: Black
VMRS Code: 034-003-016

OEM-STYLE TURN SIGNAL SWITCH FOR PACCAR®

Replaces PACCAR® 01-4813-91, TRW® 480819 without harness • 18-bulb capacity makes switch ideal for triple-trailer configurations • Adapts to applications without brake override function • Provides hazard/warning, right/left turn, lift-to-dim functions

48132 Turn Signal Switch

Regulations / Standards: FMVSS 108 / SAE Q
Finish: Black
VMRS Code: 034-003-016

Kenworth® is a registered trademark of PACCAR, Inc.; Freightliner® is a registered trademark of Daimler Trucks North America, LLC; Jeep® is a registered trademark of FCS US LLC; Chevrolet® is a registered trademark of General Motors LLC; GMC® is a registered trademark of General Motors LLC; Dodge® is a registered trademark of FCA US LLC; Fiat® is a registered trademark of FCA Marketing Group S.P.A.; Honda® is a registered trademark of Honda Motor Company, Ltd.; Acura® is a registered trademark of Honda Motor Company, Ltd.; AMC® is a registered trademark of FCA US LLC; BMW® is a registered trademark of Bayerische Motoren Worke Aktiengesellschaft; Buick® is a registered trademark of General Motors LLC; Cadillac® is a registered trademark of General Motors LLC; Chrysler® is a registered trademark of FCA US LLC; Daihatsu® is a registered trademark of Daihatsu Motor Co. Ltd.; Hyundai® is a registered trademark of Hyundai Motor Company.; Ford® is a registered trademark of Ford Motor Company CORPORATION DELAWARE; Infiniti® is a registered trademark of NISSAN JIDOSHA KABUSHIKI KAISHA.; International® is a registered trademark of International Truck Intellectual Property,; Isuzu® is a registered trademark of ISUZU JIDOSHA KABUSHIKI KAISHA. Jaguar® is a registered trademark of JAGUAR LAND ROVER LIMITED. Lincoln® is a registered trademark of FORD MOTOR COMPANY. Mazda® is a registered trademark of MAZDA MOTOR CORPORATION. Mitsubishi® is a registered trademark of MITSUBISHI JUKOGYO KABUSHIKI KAISHA. Mercury® is a registered trademark of FORD MOTOR COMPANY. Nissan® is a registered trademark of NISSAN JIDOSHA KABUSHIKI KAISHA. Plymouth® is a registered trademark of FCA US LLC.; Pontiac® is a registered trademark of GENERAL MOTORS LLC.; Porsche® is a registered trademark of Dr. Ing. h.c. F. Porsche Aktiengesellschaft.; Renault® is a registered trademark of RENAULT s.a.s.; SAAB® is a registered trademark of SAAB AB.; Subaru® is a registered trademark of FUJI JUKOGYO KABUSHIKI KAISHA.; Suzuk®i is a registered trademark of SUZUKI MOTOR CORPORATION.; Toyota® is a registered trademark of Toyota Jidosha Kabushiki Kaisha.; Yugo® is a registered trademark of OTP LLC.; Truck-Lite® is a registered trademark of TRUCK-LITE CO. Signal-Stat®is a registered trademark of TRUCK-LITE CO., LLC; International® is a registered trademark of International Truck Intellectual Property.; Paccar® is a registered trademark of PACCAR Inc.Peugeot® is a registered trademark of AUTOMOBILES PEUGEOT société anonyme sa; Eagle®; Oldsmobile®; Triumph®.

All product and company names are trademarks™ or registered® trademarks of their respective holders. Use of them does not imply any affiliation with or endorsement by them.

 © 2019 All Rights Reserved, Grote® Industries, Inc.

OEM-STYLE TURN SIGNAL SWITCH FOR INTERNATIONAL®

Replaces International® 354493C92 without harness • 18-bulb capacity makes switch ideal for triple-trailer configurations • Adapts to applications without brake override function • Provides hazard/warning, left/right turn, lift-to-dim functions

48283 Turn Signal Switch

Regulations / Standards: FMVSS 108 / SAE Q
Finish: Black
VMRS Code: 034-003-016

OEM-STYLE MARKER / FLASH AND WIPER TURN SIGNAL SWITCH FOR INTERNATIONAL®

Replaces International® 2004505C91 without harness • 18-bulb capacity makes switch ideal for triple-trailer configurations • Adapts to applications without brake override function • Provides hazard/warning, left/right turn, lift-to-dim functions • Mounting hardware kit includes tapped inserts with screws for mounting to existing brackets and a worm gear clamp with a range of 1"–2.5" for mounting to round columns • Chrome-plated end push-button for flashing marker lamps • Slide switch for 2-speed wiper control

48442 Turn Signal Switch

Regulations / Standards: FMVSS 108 / SAE Q
Finish: Black
VMRS Code: 034-003-016

NEED HELP FINDING THE RIGHT PRODUCT?

GROTE® CUSTOMER SERVICE IS JUST A PHONE CALL AWAY

800-628-0809

Grote

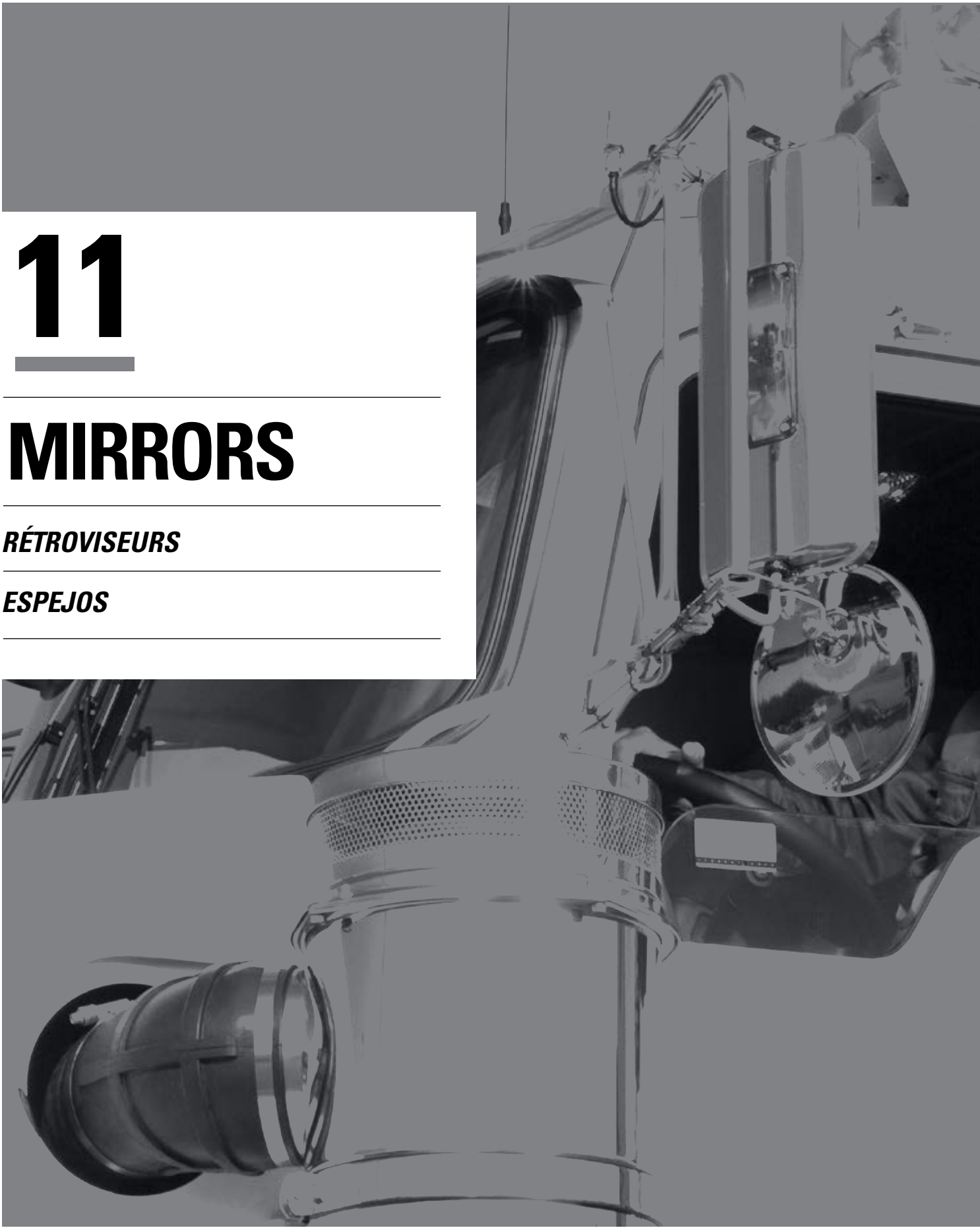

11

MIRRORS

RÉTROVISEURS

ESPEJOS

WWW.GROTE.COM | © 2019 All Rights Reserved, Grote® Industries, Inc.

WEST COAST MIRRORS

Whether you reside near the Pacific, Atlantic, or any place in between, West Coast Mirrors give you maximum visibility. Don't let the name confuse you—if you need enhanced rear view capability, are looking for retro-styling, or making an OEM-quality repair or replacement—premium Grote® West Coast mirrors will do the trick. Pick the style, color, and features you need and you will be on your way.

16021

16023

16244

6" X 16" WEST COAST MIRRORS

Part Number	Description	Back Style	Back Color	Reflective Area	Housing Material	Regulations / Standards
16021	OEM Style, Powder-Coated	Angle	White	101 Sq. In.	Steel	FMVSS 111, 10,000+ lbs
16023	OEM Style, Powder-Coated	Angle	Stainless Steel	101 Sq. In.	Steel	FMVSS 111, 10,000+ lbs

VMRS Code: 002-010-006

© 2019 All Rights Reserved, Grote® Industries, Inc.

WEST COAST MIRRORS

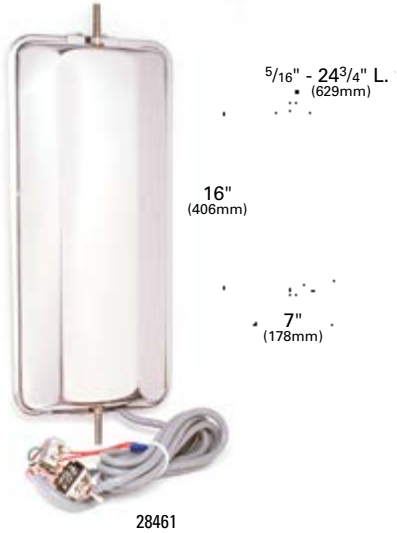

7" X 16" WEST COAST HEATED MIRRORS

Part Number	Description	Back Style	Back Color	Reflective Area	Housing Material	Volts / Amps	Regulations / Standards
28461	Remote Control, Heated, Motorized	Angle	Stainless Steel	94 Sq. In.	Steel	12V/3.1A	FMVSS 111, 10,000+ lbs
28463	Remote Control, Heated	Angle	Stainless Steel	94 Sq. In.	Steel	12V/3.1A	FMVSS 111, 10,000+ lbs
16053	OEM Style, Heated	Angle	Stainless Steel	101 Sq. In	Steel	12V/3.1A	FMVSS 111, 10,000+ lbs
16153	OEM Style, Pyramid	Peak	Stainless Steel	101 Sq. In.	Steel	12V/1.25A	FMVSS 111, 10,000+ lbs

7" X 16" WEST COAST MIRRORS

Part Number	Description	Back Style	Back Color	Reflective Area	Housing Material	Regulations / Standards
16091	OEM Style, Powder-Coated	Ribbed	White	93 Sq. In.	Steel	FMVSS 111, 10,000+ lbs
16092	OEM Style, Powder-Coated	Ribbed	Black	93 Sq. In.	Steel	FMVSS 111, 10,000+ lbs
16093	OEM Style, Natural Finish	Ribbed	Stainless Steel	93 Sq. In.	Steel	FMVSS 111, 10,000+ lbs
26001-5 RETAIL	OEM Style, with Arm Assembly	Ribbed	White	93 Sq. In.	Steel	FMVSS 111, 10,000+ lbs
16041	Split Focus with Adj. Convex	Angle	White Enamel	57 Sq. In. /20 Sq. In.	Steel	FMVSS 111, 10,000+ lbs
16043	Split Focus with Adj. Convex	Angle	Stainless Steel	57 Sq. In. /20 Sq. In.	Steel	FMVSS 111, 10,000+ lbs
16123	OEM Style, Powder-Coated	Angle	Stainless Steel	101 Sq. In.	Steel	FMVSS 111, 10,000+ lbs
16202	Economy, Warp Proof	Angle	Black	95 Sq. In.	Polypropylene	FMVSS 111, 10,000+ lbs
16244	Economy, Aluminum	Angle	Metallic	87 Sq. In.	Aluminum	
16284	Navistar® OEM Replacment	Flat	Metallic	101 Sq. In.	Aluminum	FMVSS 111, 10,000+ lbs
16273	OEM Style, Pyramid	Peak	Stainless Steel	101 Sq. In.	Steel	FMVSS 111, 10,000+ lbs
16101	OEM Style, Powder-Coated	Bubble	White	93 Sq. In.	Steel	FMVSS 111, 10,000+ lbs
16102	OEM Style, Powder-Coated	Bubble	Black	93 Sq. In.	Steel	FMVSS 111, 10,000+ lbs

VMRS Code: 002-010-006

 © 2019 All Rights Reserved, Grote® Industries, Inc.

16043

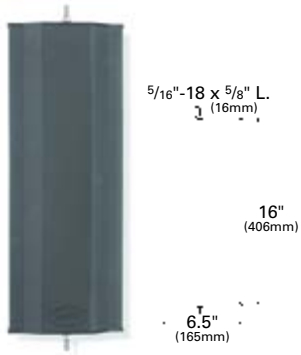

16202

16244

16284

16273

16102 16101

WEST COAST MIRROR ACCESSORIES

WEST COAST MIRROR BRACKET ASSEMBLY

22013 Stainless Steel

Material: Stainless Steel

C-LOOP BRACKET

22233 Stainless Steel

Material: Stainless Steel
Finish: Stainless Steel

WEST COAST HEATING ELEMENT REPLACEMENT

29060 Element

Material: Adhesive Black Heated Board
Volts / Amps: 12V / 3.1 AMP

© 2019 All Rights Reserved, Grote® Industries, Inc.

28033

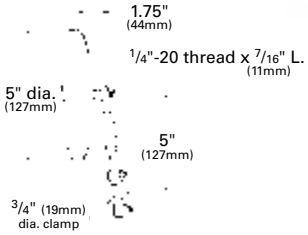

5" ROUND CLAMP-ON SPOT MIRROR

Provides wider vision • Includes arm and clamp to attach securely to mirror arm • Single-strength silvered mirror

5" CONVEX:

28032 Black, Powder-Coated, w/ Arm Assembly
28033 Stainless Steel, w/ Arm Assembly
28033-5 Stainless Steel, w/ Arm Assembly RETAIL

5" FLAT GLASS:

28162 Black, Powder-Coated, w/ Arm Assembly
28152 Black w/ "L" Bracket

Material: Stainless Steel, Steel
FMVSS: 111 Vehicles with GVWR greater than 10,000 lbs.
Reflective: 20 sq. in.
Finish: Stainless, Black
Accessory: Extension Arm: 10073
VMRS Code: 002-010-026 - 28032, 28033, 28033-5, 28152
002-010-006 - 28162

28663

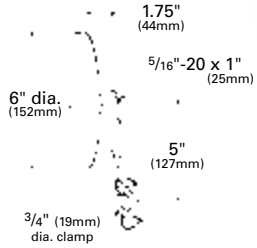

6" CONVEX CENTER-MOUNT SPOT MIRROR

Features stainless steel construction and adjustable ball swivel
• Available with or without "L" bracket

MIRROR HEAD ONLY

12053 Stainless Steel
12052 Black

MIRROR HEAD AND "L" BRACKET

28663 Stainless Steel

MIRROR HEAD AND ARM ASSEMBLY

28042 Black, Powder-Coated
28043 Stainless Steel

Material: Stainless Steel, Steel
FMVSS: 111 Vehicles with GVWR greater than 10,000 lbs.
Reflective: 28 sq. in.
Finish: Stainless, Black
Accessory: Arm Assembly: 10173 (with "L" Bracket)
Bracket: 11303 ("L" Bracket Only); 10073 (Arm Assembly Only)
VMRS Code: 002-010-026 - 12053, 28663, 28042, 28043
002-010-008 - 12052

 © 2019 All Rights Reserved, Grote® Industries, Inc.

8" ROUND CONVEX MIRROR WITH CENTER-MOUNT BALL-STUD

Three-screw stud tightens firmly • 1/4" UNC female ball stud • Painted mirrors feature rugged powder-coat finish • Heated mirror includes 60" two-conductor jacketed blunt-cut cable and adhesive heater board (12283)

12182 Black
12183 Stainless Steel
12293 Stainless Steel with Attached "L" Bracket

HEATED MIRROR:

12283 Stainless Steel

PLASTIC HOUSING:

12983 Chrome

Material: Stainless Steel / Steel / Polypropylene
Reflective: 46.7 sq. in.
Finish: Stainless, Black, Chrome
Volts / Amps: 12V / 1.18A
Bracket: 11133
VMRS Code: 002-010-026

12283

8" dia.
(203mm)

¼"-20 x 1"
female thread

8" ROUND CONVEX MIRROR WITH OFFSET BALL-STUD

Easy mounting in tight installations • Ball-stud offset 2" from center • Heated mirror includes 60" two-conductor jacketed blunt-cut cable and adhesive heater board (12813)

12172 Black, Powder-Coated
12173 Stainless Steel

HEATED MIRROR:

12813 Stainless Steel

Material: Stainless Steel / Steel
Reflective: 46 sq. in.
Finish: Stainless, Black
Volts / Amps: 12V / 1.18A
VMRS Code: 002-010-026 - 12172, 12173
002-010-037 - 12813

12172

2"
(51mm)

8" dia.
(203mm)

¼"-20 x 1" female thread

8½" CONVEX MIRROR WITH CENTER-MOUNT, BALL-STUD

Adjustable ball stud mounting • Single-strength, silvered mirror • Includes "L" Bracket

16033 Stainless Steel
16032 Black

PLASTIC HOUSING:

12983 Chrome

Material: Stainless Steel / Steel/Polypropylene
Reflective: 56 sq. in.
Finish: Stainless, Black, Chrome
Bracket: 11303
VMRS Code: 002-010-026

16033

8.5" dia.
(216mm)

5/16"-24 x 1"
(25mm)
female thread

© 2019 All Rights Reserved, Grote® Industries, Inc.

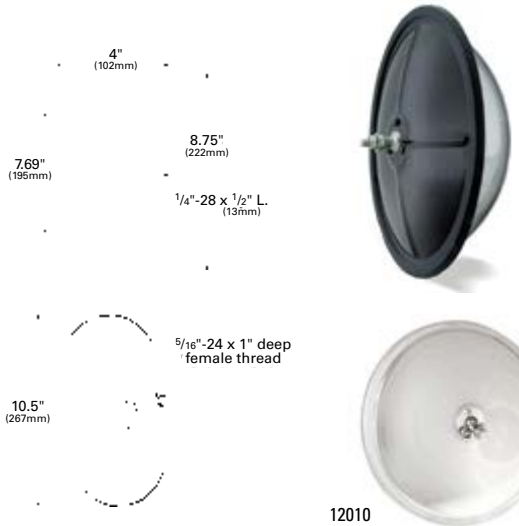

8" ELLIPTICAL MIRROR

Eliminates blind spots • Optimum crossover viewing • 4 1/4" radius x 7 11/16" dia.

12272-5 Black, Mirror Head Only RETAIL

Material: Steel / Acrylic
Reflective: 45 sq. in.
Finish: Black
VMRS Code: 002-010-026

12010

CONVEX MIRROR WITH CENTER MOUNT

Popular for highway service vehicles • Reinforced internal retainers • Large steel ball-stud for precise positioning • Replacement for 10 1/2" crossover mirrors

10 1/2" CONVEX MIRROR:

12010 Stainless Steel

12" CONVEX MIRROR:

12020 Gray, 3/8" - 24 11/16", Deep-Thread Ball-Stud

Material: Stainless Steel / Steel
Reflective: 10 1/2" - 95 sq. in.; 12" - 135 sq. in.
Finish: Stainless/Gray
VMRS Code: 002-010-026

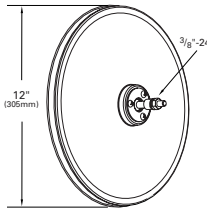

12020

28193

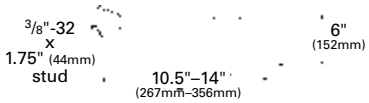

ADJUSTABLE MIRROR ASSEMBLY

Arm adjustable from 10" to 13" • Swivel bracket enables precise adjustment • Chrome arm and brackets

28193 6" Mirror (12053) and Adjustable Arm Assembly

ARM ASSEMBLY ONLY

10433 Arm & Swivel Bracket Only

Material: Stainless Steel (12053), Steel (10433)
Reflective: 26 sq. in.
Finish: Stainless (mirror head) / Chrome (arm assembly)
VMRS Code: 002-010-006 - 28193
002-010-013 - 10433

28443

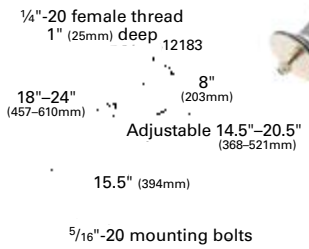

CONVENTIONAL FENDER-MOUNT MIRROR

8" stainless steel convex mirror • Stainless steel brackets • Bell cup mounting for fiberglass fenders • Grote® 8" convex mirror (12182/3) will fit bracketry

28443 Stainless Steel (Assembly Including Mirror)

ARM ASSEMBLY ONLY

22193 Stainless Steel

MIRROR HEAD ONLY

12183 Stainless Steel

Material: Stainless Steel
Reflective: 46 sq. in.
Finish: Stainless
VMRS Code: 002-010-006 - 28443
002-010-013 - 22193
002-010-026 - 12183

 © 2019 All Rights Reserved, Grote® Industries, Inc.

SCHOOL BUS EXTERIOR BLIND SPOT MIRROR

Meets state laws for blind spot visibility • Zinc-plated bracketry
• 8" convex mirror

28063 Vertical-Mount Assembly, Stainless Steel
11195 Bracket Only w/o Mirror

MIRROR HEAD ONLY

12183 Stainless Steel

Material: Stainless Steel, Steel
Reflective: 46 sq. in.
Finish: Stainless
VMRS Code: 002-010-006 - 28063
002-010-013 - 11195
002-010-026 - 12183

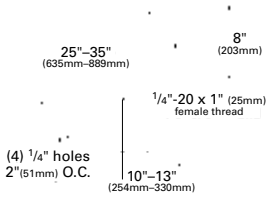

8½" CONVEX CROSS-OVER MIRROR

Ideal for improving safety on straight trucks and delivery trucks
• Features rugged tripod mount for front or rear

28481 White, Mirror Assembly

Material: Steel
Reflective: 56 sq. in.
Finish: White
VMRS Code: 002-010-026

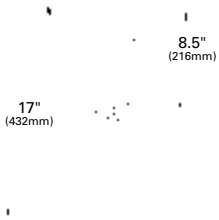

HOOD-MOUNTED MIRROR

Bright stainless steel finish • Assembly comes with both a curved and straight extension for improved vision and range of application
• Kit includes backing plate, gasket, mounting hardware, and instructions
• 8 1/2" convex stainless steel mirror head included

12153 Stainless Steel

Material: Stainless Steel
Reflective: 56 sq. in.
Finish: Stainless
VMRS Code: 002-010-026

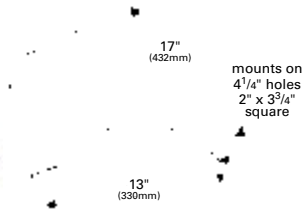

10½" CONVEX CROSS-OVER MIRROR

Ideal for improving safety on straight trucks and delivery trucks • Features rigid 90° bracket

28491 White, Mirror Assembly
28493 Stainless Steel, Mirror Assembly

Material: Stainless Steel, Steel
Reflective: 95 sq. in.
Finish: Stainless / White
VMRS Code: 002-010-026

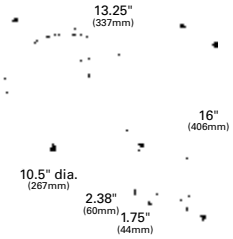

© 2019 All Rights Reserved, Grote® Industries, Inc.

28453

SPLIT MIRROR

Swing-away feature with detent • Fits right or left side • Top mirror is 6 1/2" x 10" flat glass • Bottom mirror is 6 1/2" x 6" convex

28453 Stainless Steel

REPLACEMENT 6 1/2" X 10" MIRRORS:

12301 White
12303 Stainless Steel

REPLACEMENT 6 1/2" X 6" MIRRORS:

12331 White
12333 Stainless Steel

Material: Stainless Steel, Steel
Reflective: 10" - 56 sq. in.; 6" - 33 sq. in.
Finish: Stainless, White
VMRS Code: 002-010-006 - 28453
002-010-026 - 12301, 12303, 12331, 12333

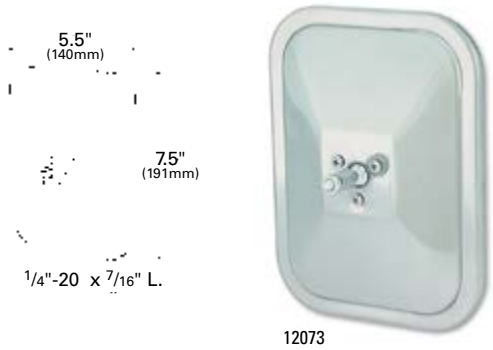

12073

ROLLED-RIM MIRROR WITH BALL SWIVEL

1/4"- 20 x 7/16" ball swivel • Painted mirrors feature rugged powder-coated finish

12071 White
12072 Black
12073 Stainless Steel
12073-5 Stainless Steel RETAIL

Material: Stainless Steel, Steel
Reflective: 33 sq. in.
Finish: Stainless, White, Black
VMRS Code: 002-010-026

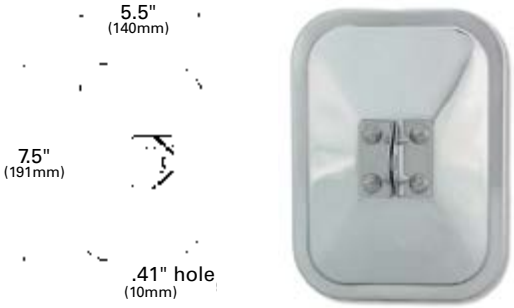

ROLLED-RIM MIRROR WITH CENTER MOUNT

Inner glass cushion

12243-5 Stainless Steel RETAIL

Material: Stainless Steel
Reflective: 33 sq. in.
Finish: Stainless
VMRS Code: 002-010-026

12113-5

BELOW-EYE-LEVEL MIRROR

Offset mount • 7 1/2" x 10 1/2" mirror • Painted mirrors feature rugged powder-coated finish

12111-5 White RETAIL
12113-5 Stainless Steel RETAIL

Material: Stainless Steel, Steel
Reflective: 61 sq. in.
Finish: Stainless, White
VMRS Code: 002-010-026

 © 2019 All Rights Reserved, Grote® Industries, Inc.

OUTER PROTECTIVE BUMPER MIRROR

Ball swivel • 7" x 10" rectangular mirror • Features rugged powder-coated finish

12102 Black

Material: Steel
Reflective: 52 sq. in.
Finish: Black
VMRS Code: 002-010-006

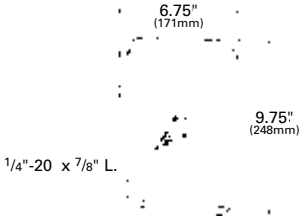

SUPER TRIPOD-MOUNT MIRROR

Stainless steel tripod brackets • Offset mounting • Flips to total field of vision • Jumbo 7 1/2" x 10 1/2" stainless steel head

28323-5 Stainless Steel RETAIL

MIRROR HEAD:

12113-5 Stainless Steel RETAIL
12111-5 White RETAIL

Material: Stainless Steel
Reflective: 61 sq. in.
Finish: Stainless, White
Accessory: 90° Arm: 10623; Extension Arm: 10083
VMRS Code: 002-010-006 - 28323-5
002-010-026 - 12113-5, 12111-5

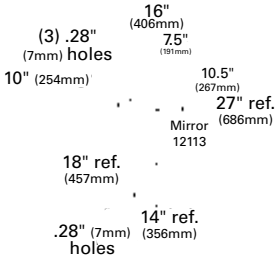

50" WIDE-VIEW MIRROR

OEM-styled mirror, fits right or left side • Two-screw ball swivel • Fits full-size pickup trucks and vans

12193-5 Stainless Steel, Mirror Only RETAIL

Material: Stainless Steel
Reflective: 50 sq. in.
Finish: Stainless
VMRS Code: 002-010-026

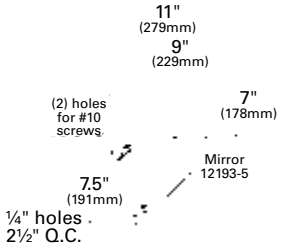

FORD® TRUCK & VAN MIRROR

Swings back against body on impact • Memory detent locks back into original position

28393-5 Chrome Mirror w/ Anodized Aluminum Bracket RETAIL
12263-5 Mirror Only RETAIL

Material: Steel, Aluminum
Reflective: 38 sq. in.
Finish: Aluminum
VMRS Code: 002-010-006 - 28393-5
022-010-026 - 12263-5

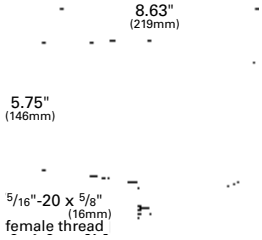

© 2019 All Rights Reserved, Grote® Industries, Inc.

MINI-TRUCK MIRROR

Fits door contours of mini import trucks • Easy-to-mount, plastic connectors • 5 1/2" x 7 1/2" mirror head

28252-5 Black, Powder-Coated RETAIL

Material: Steel
Reflective: 33 sq. in.
Finish: Black
VMRS Code: 002-010-006

28051

RECTANGULAR STACK & SPOT MIRROR

Greater coverage of blind spots • Includes arm and clamp • Painted mirrors feature rugged powder-coated finish

28051 White w/ Arm Assembly
12122 Black, Mirror Only

Material: Steel
Reflective: 20 sq. in.
Finish: White/ Black
VMRS Code: 002-010-006 - 28051
002-010-026 - 12122

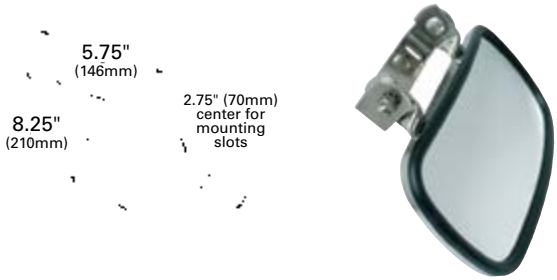

RECTANGULAR OVER-THE-DOOR CONVEX MIRROR

9/16" x 5/16" mounting holes • For "look-down" mirror applications over passenger-side door

28763 Over Door Convex

Material: Stainless Steel
Reflective: 26 sq.in.
Finish: Stainless
VMRS Code: 002-010-026

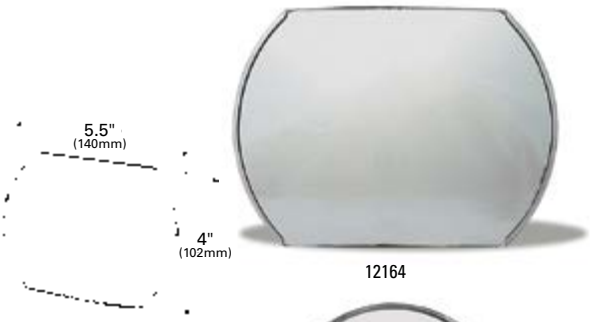

12164

12004

STICK-ON CONVEX MIRROR

Extends driver's view • Bonds instantly • Single-strength silvered mirror • Aluminum mirror back

ROUND:

12004	3"	
12004-5	3"	RETAIL
12014	3 3/4"	
12014-5	3 3/4"	RETAIL
12201-5	2"	RETAIL

RECTANGULAR:

12164	4" x 5 1/2"	
12164-5	4" x 5 1/2"	RETAIL

Material: Aluminum
Regulations / Standards: 96-hour corrosion test per ASTM B-117, will withstand 30 lb. pull test
Finish: Aluminum
VMRS Code: 002-010-008

 © 2019 All Rights Reserved, Grote® Industries, Inc.

HOT SPOT MIRROR

Fits any flat surface • Weather-resistant high-strength adhesive

12312-5 Black RETAIL

Material: Polypropylene
Finish: Black
VMRS Code: 002-010-008

10" INSIDE REAR VIEW MIRROR

Non-glare adjustment lever • OEM styling • Includes mirror, mount, instructions, and adhesive

18302-5 Black RETAIL

Material: Polypropylene
Finish: Black
VMRS Code: 002-010-002

WEST COAST MIRROR BRACKET ASSEMBLY

Complete kit includes mirror arms, mounting, hardware and instructions • Rigid mounting for West-Coast-style mirrors • Accommodates additional spot mirrors

22013 Stainless Steel

Material: Stainless Steel
VMRS Code: 002-010-013

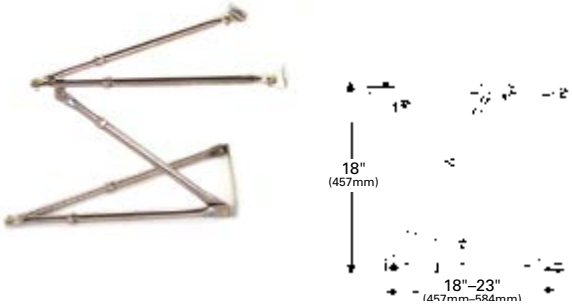

C-LOOP BRACKET

Can be used in conjunction with most West-Coast-bracket assemblies • Allows for adjustable, "break-away" mounting of any 7"x16" or 6"x16" West Coast mirror • Accommodates additional stack-on spot mirrors

22233 Stainless Steel

Material: Stainless Steel
Finish: Stainless
VMRS Code: 002-010-013

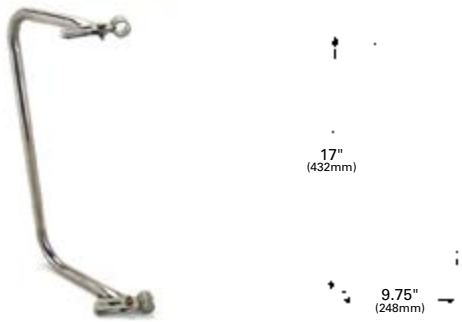

WEST COAST HEATING ELEMENT REPLACEMENT

Defroster element fits West Coast style mirrors • Water-resistant • 40 watts • Fits 6" x 16" or 7" x 16" West Coast mirrors

29060 Element

Material: Adhesive Black Heated Board
Volts / Amps: 12V / 3.1A
VMRS Code: 002-010-006

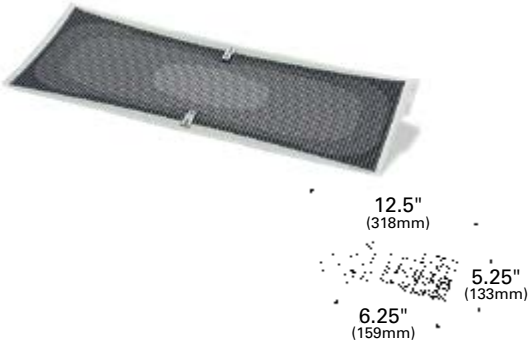

© 2019 All Rights Reserved, Grote® Industries, Inc.

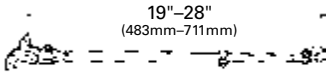

3/4" clamp
(4) 1/4" holes, 1 7/8" O.C. offset

HEAVY-DUTY ADJUSTABLE BRACE ARM

19"-28" • Zinc-coated steel

10025 Adjustable Arm

Material: Steel
Finish: Zinc
VMRS Code: 002-010-013

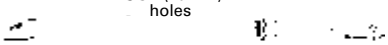

10"–13"

ADJUSTABLE MIRROR ARM

Features rugged powder-coated finish

10"–13" ARM:

10002 Black

14"–22" ARM:

10012 Black
10013 Chrome

Material: Steel
Finish: Black, Chrome
VMRS Code: 002-010-013

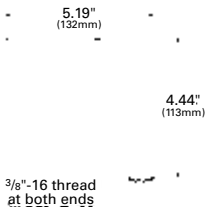

90° EXTENSION ARM

4 1/2" offset length

10623 Aluminum

Material: Aluminum
Finish: Chrome
VMRS Code: 002-010-013

3/8" (10mm) holes

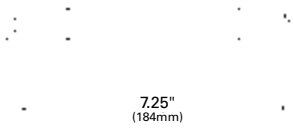

8" FLAT MIRROR ARM

Silver metallic powder-coated finish

10045 Silver Finish

Material: Steel
Finish: Silver metallic
VMRS Code: 002-010-013

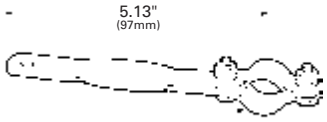

3/4" clamp

EXTENSION ARM & CLAMP ASSEMBLY FOR STACK MIRRORS

10073 Extension Arm

Material: Stainless Steel
Finish: Stainless
VMRS Code: 002-010-013

 © 2019 All Rights Reserved, Grote® Industries, Inc.

UNIVERSAL MOUNTING KIT

Complete kit includes extension arm, clamp mounting, and hardware
• Perfect for adding on spot mirrors • Suited for 5" and 6" spot mirrors

10173 "L" Bracket

Material: Stainless Steel, Steel
VMRS Code: 002-010-013

STAINLESS STEEL "L" BRACKET

Allows mounting of convex mirror on West Coast mirror bracket

11133 Stainless Steel

Material: Stainless Steel
VMRS Code: 002-010-013

THROUGH-HOLE STYLE "L" BRACKET

Rugged construction • Perfect accessory for adding on spot mirrors
• For 3/4" mirror arm tubing

11303 "L" Bracket

Material: Stainless Steel
VMRS Code: 002-010-013

TUBE CLAMP

Kit includes clamp and hardware • Perfect accessory for adding spot mirrors • Rugged, bright stainless steel bracket construction

11293 3/4" Clamp, 3/8" Holes

Material: Stainless Steel, Steel
VMRS Code: 002-010-013

Navistar® is a registered trademark of Navistar International Corporation.; Ford® is a registered trademark of Ford Motor Company CORPORATION DELAWARE;

All product and company names are trademarks™ or registered® trademarks of their respective holders. Use of them does not imply any affiliation with or endorsement by them.

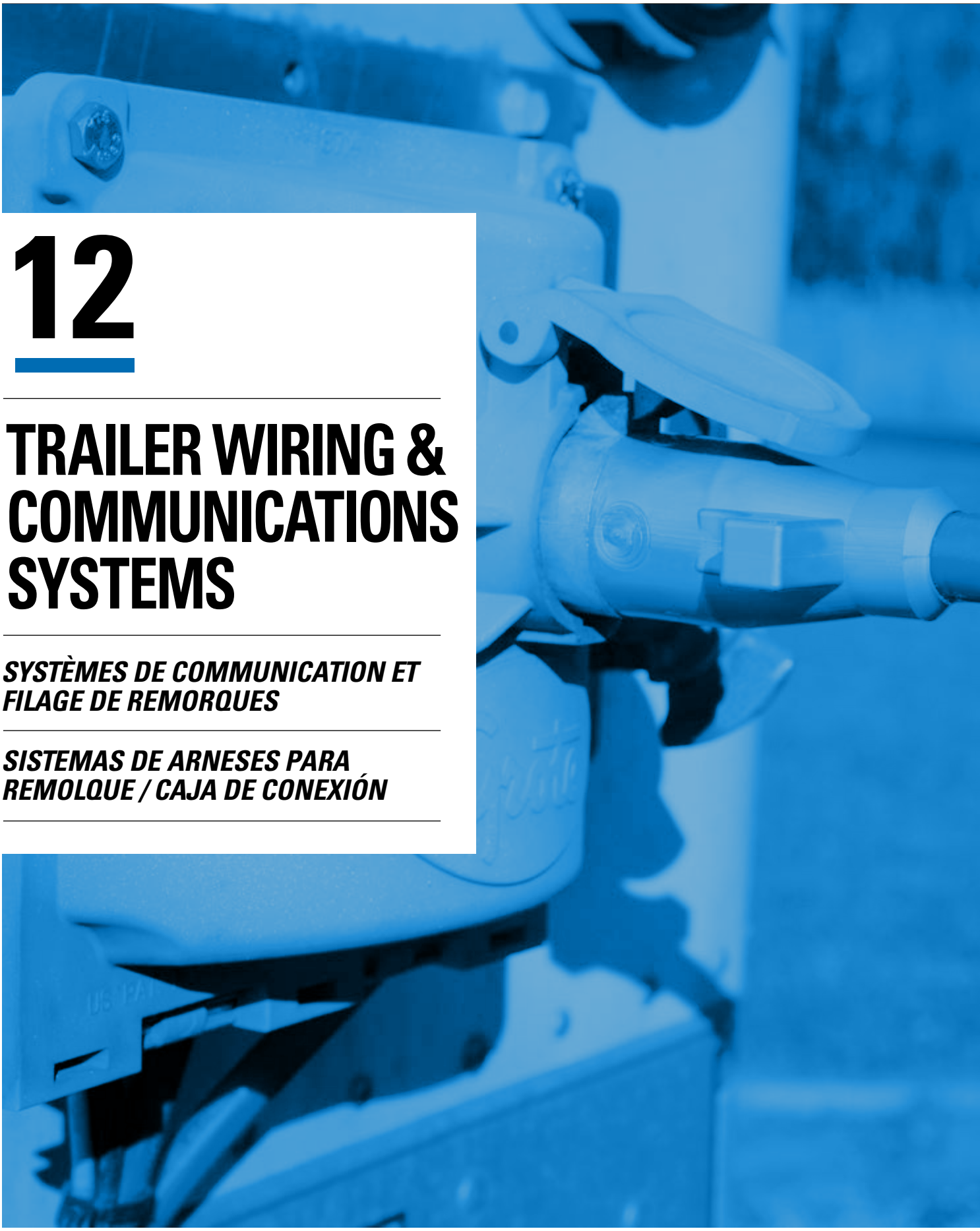

12

TRAILER WIRING & COMMUNICATIONS SYSTEMS

SYSTÈMES DE COMMUNICATION ET FILAGE DE REMORQUES

SISTEMAS DE ARNESES PARA REMOLQUE / CAJA DE CONEXIÓN

 © 2019 All Rights Reserved, Grote® Industries, Inc.

GROTE GUARDIAN® SMART SYSTEM

- **REAL-TIME ALERTS**
  Get real-time alerts about your trailer lighting system sent straight to your smartphone or telematics system. Grote Guardian® samples at a rate of up to 100 times per second, measuring both voltage and current to determine when an event has occurred and let you know immediately.
- **OPTION FOR A GATEWAY DATA NOTIFICATION**
  Set up a geofence, so any time a trailer enters the lot, it uploads data to a cloud-based server and generates a notification to the maintenance manager of any failures.
- **THE SYSTEM IS HIGHLY VERSATILE**
  Simply integrating with the trailer via one of three Grote® nosebox options working with both LED and incandescent lights for all trailer types.
- **MAXIMIZE SECURITY AND UPTIME**
- **MINIMIZE MAINTENANCE COST AND CSA EXPOSURE**

Visit ***Grote.com/Guardian*** to learn more and watch Grote Guardian® in action.

G7 Version

Geofence Gateway

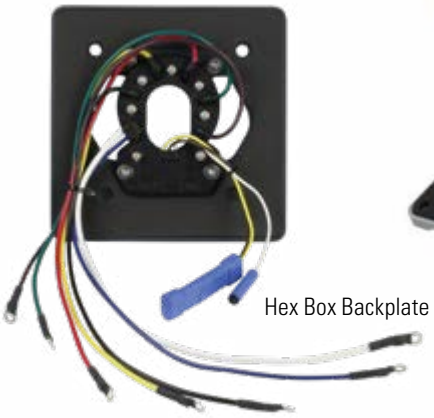
Hex Box Backplate

Ultra Nose Box Gen 3

VMRS Code: 036-009-000

© 2019 All Rights Reserved, Grote® Industries, Inc.

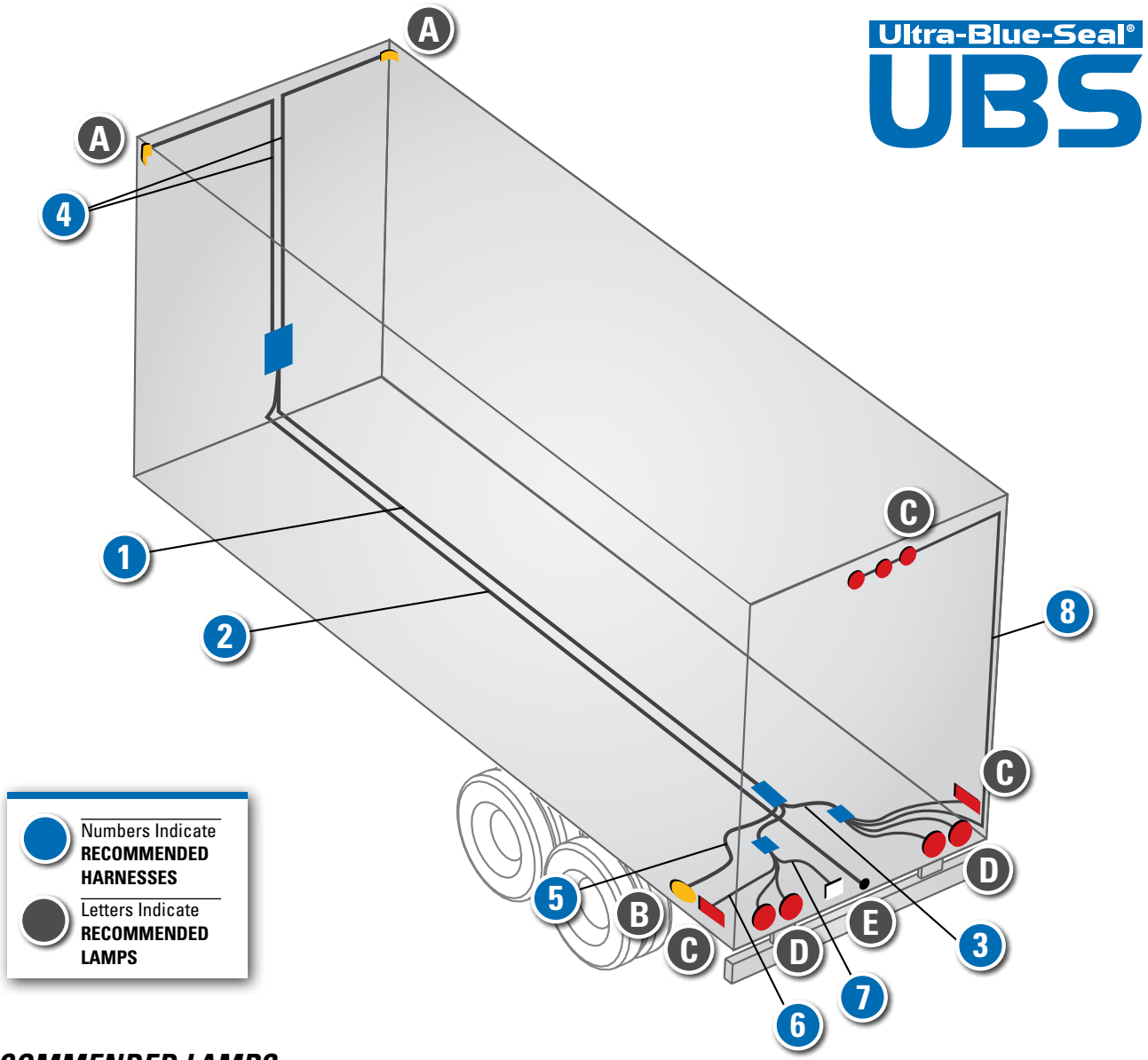

RECOMMENDED LAMPS

A FRONT MARKERS

SuperNova® 3" Thin-Line LED Clearance/Marker Lamp	Page 47
SuperNova® Sealed Turtleback® II LED Clearance/Marker Lamp	Page 55
MicroNova® DOT LED Clearance/Marker Lamp	Page 35
MicroNova® LED Clearance/Marker Lamp	Page 36

B ABS

MicroNova® DOT LED Clearance/Marker Lamp	Page 35
MicroNova® LED Clearance/Marker Lamp	Page 36

C REAR SIDE, CLEARANCE MARKERS & REAR I.D.

SuperNova® 3" Thin-Line LED Clearance/Marker Lamp	Page 47
SuperNova® Sealed Turtleback® II LED Clearance/Marker Lamp	Page 55
MicroNova® DOT LED Clearance/Marker Lamp	Page 35
MicroNova® LED Clearance/Marker Lamp	Page 36

D STOP/TAIL/TURN

SuperNova® 4" LED Stop/ Tail/ Turn Lamp	Page 75
SuperNova® 4" NexGen LED Stop/Tail/Turn	Page 77

E LICENSE

MicroNova® Multi-Volt LED License Lamp	Page 119
MicroNova® Multi-Volt DOT LED License Lamp	Page 119

 © 2019 All Rights Reserved, Grote® Industries, Inc.

28' VAN TRAILER ULTRA-BLUE-SEAL® HARNESS SYSTEM

1 MAIN HARNESS

Part #	Front Connection	ABS Drop	Wire Gauge	Length	VMRS Code
01-6670-L5	#10 Ring Terminal	60"	1-8, 2-10, 4-12	420"	034-004-023

2 PINTLE MAIN

Part #	Forward Connection	Rear Connection	Wire Gauge	Length	VMRS Code
01-6660-K3	#10 Ring Terminal	Push-On	1-8, 2-10, 4-12	420"	034-004-023
66601	#10 Ring Terminal	#10 Ring Terminal	1-8, 2-10, 4-12	420"	034-004-023

3 REAR SILL

Part #	Lamp Plug	Curb Side	Road Side	ABS Drop	VMRS Code
01-6758-86	Straight Male Pin	60"	50"	53"	034-004-023
01-6758-87	Straight Male Pin	89"	16"	18"	034-004-023

4 FRONT MARKER HARNESS

Part#	Lamp Connection	Power Connection	Length	Side	VMRS Code
66222	.180 Slim-Line Female	.180 Slim-Line Male	96"	Road	034-004-023
05-2018-93	.180 Slim-Line Female	.180 Slim-Line Male	144"	Curb	034-004-023
01-6620-C8	.180 Slim-Line Female	#10 ring terminal	96"	Road	034-004-023
01-6620-C9	.180 Slim-Line Female	#10 Ring Terminal	144"	Curb	034-004-023

5 ABS FAULT LAMP HARNESS

Part#	Lamp Connection	Power Connection	Length	VMRS Code
66203	.180 Slim-Line Female	.180 Slim Line Male	72"	034-004-023

6 REAR MARKER HARNESS

Part#	Lamp Connection	Power Connection	Length	VMRS Code
01-6707-A9	Turtleback® II	.180 Slim-Line Male	24"	034-004-042
01-6693-74	Thinline LED	.180 Slim-Line Male	24"	034-004-042
05-2018-47	.180 Slim-Line Female	.180 Slim-Line Male	24"	034-004-023

7 LICENSE LAMP HARNESS

Part#	Lamp Connection	Power Connection	Length	VMRS Code
66221	.180 Slim-Line Female	.180 Slim-Line Male	60"	034-004-023

8 REAR I.D. HARNESS

Part#	Lamp Connection	Power Connection	Length	VMRS Code
01-6707-C3	Turtleback® II	.180 Slim-Line Male	120" w/12" On Center Spacing	034-004-023
66402	Thinline LED	.180 Slim-Line Male	120" w/12" On Center Spacing	034-004-023
01-6621-A9	.180 Slim-Line Female	.180 Slim-Line Male	120" w/12" On Center Spacing	034-004-023

Lamp connection descriptions and information begins on page 255

© 2019 All Rights Reserved, Grote® Industries, Inc.

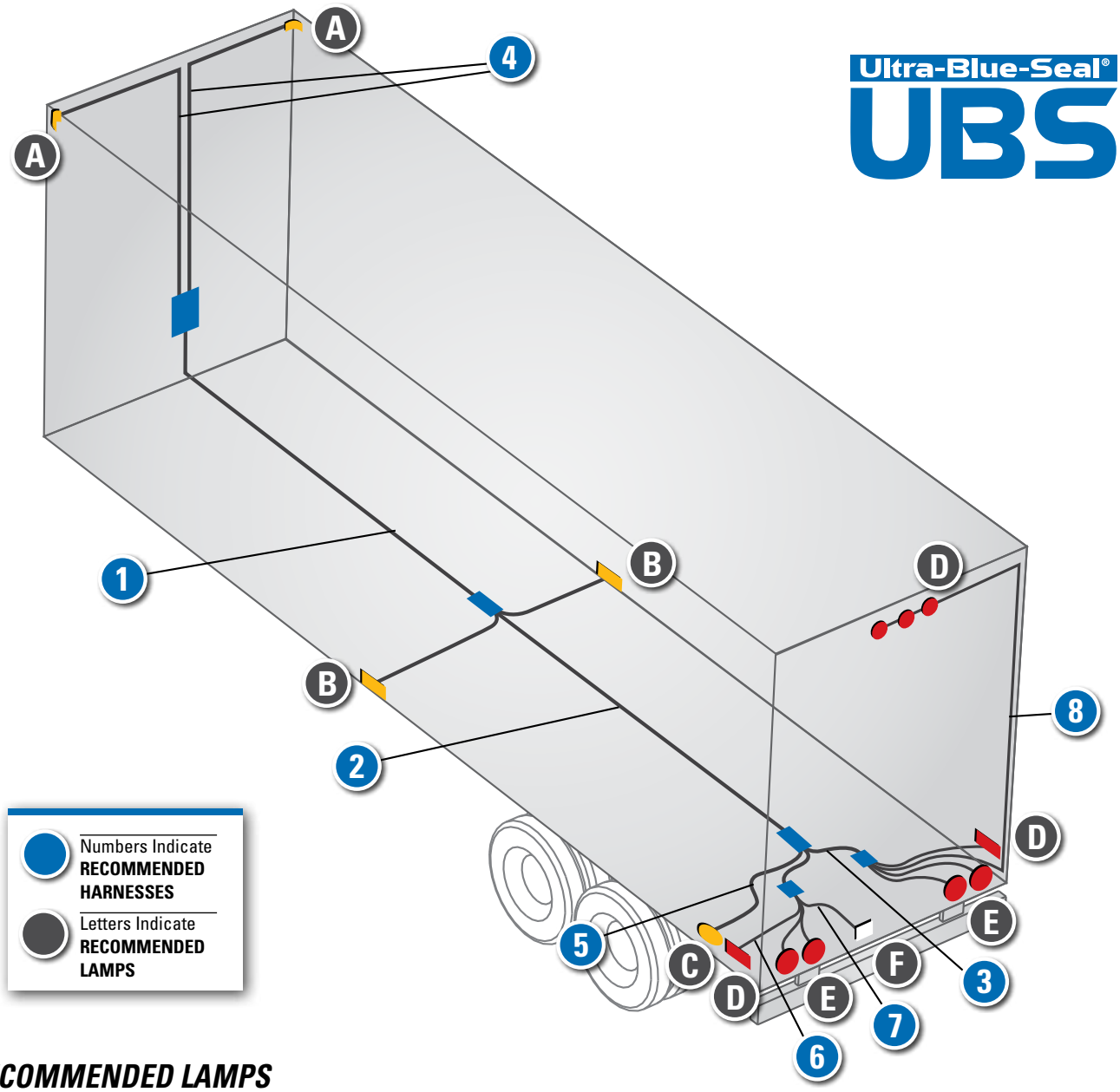

RECOMMENDED LAMPS

A FRONT MARKERS

SuperNova® 3" Thin-Line LED Clearance/Marker Lamp	Page 47
SuperNova® Sealed Turtleback® II LED Clearance/Marker Lamp	Page 55
MicroNova® DOT LED Clearance/Marker Lamp	Page 35
MicroNova® LED Clearance/Marker Lamp	Page 36

B MID-TURN

SuperNova® Oval LED Side Turn/Marker Lamp	Page 86

C ABS

MicroNova® DOT LED Clearance/Marker Lamp	Page 35
MicroNova® LED Clearance/Marker Lamp	Page 36

D REAR SIDE, CLEARANCE MARKERS & REAR I.D.

SuperNova® 3" Thin-Line LED Clearance/Marker Lamp	Page 47
SuperNova® Sealed Turtleback® II LED Clearance/Marker Lamp	Page 55
MicroNova® DOT LED Clearance/Marker Lamp	Page 35
MicroNova® LED Clearance/Marker Lamp	Page 36

E STOP/TAIL/TURN

SuperNova® 4" LED Stop/ Tail/ Turn Lamp	Page 75
SuperNova® 4" NexGen LED Stop/Tail/Turn	Page 77

F LICENSE

MicroNova® Multi-Volt LED License Lamp	Page 119
MicroNova® Multi-Volt DOT LED License Lamp	Page 119

 © 2019 All Rights Reserved, Grote® Industries, Inc.

53' VAN TRAILER ULTRA-BLUE-SEAL® HARNESS SYSTEM

1 FORWARD MAIN

Part #	Front Connection	Curb Side	Road Side	Wire Gauge	Length	VMRS Code
01-6661-A2	Push-On	56"	56"	1-10, 6-12	375"	034-004-023
01-6660-M6	Push-On	108"	15"	1-10, 6-12	375"	034-004-023
01-6605-W3	#10 Ring Terminal	108"	15"	1-10, 6-12	375"	034-004-023
01-6606-X3	#10 Ring Terminal	56"	56"	1-10, 6-12	375"	034-004-023

2 INTERMEDIATE MAIN

Part #	Length	ABS Drop	Wire Gauge	VMRS Code
01-6605-W7	342"	132"	1-10, 6-12	034-004-023
01-6605-X4	288"	180"	1-10, 6-12	034-004-023

3 REAR SILL

Part #	Lamp Plug	Curb Side	Road Side	ABS Drop	Wire Gauge	VMRS Code
01-6758-86	Straight Male Pin	60"	50"	53"	1-12, 4-14	034-004-023
01-6758-87	Straight Male Pin	89"	16"	18"	1-12, 4-14	034-004-023

4 FRONT MARKER HARNESS

Part#	Lamp Connection	Power Connection	Length	Side	VMRS Code
66222	.180 Slim-Line Female	.180 Slim-Line Male	96"	Road	034-004-023
05-2018-93	.180 Slim-Line Female	.180 Slim-Line Male	144"	Curb	034-004-023
01-6620-C8	.180 Slim-Line Female	#10 ring terminal	96"	Road	034-004-023
01-6620-C9	.180 Slim-Line Female	#10 Ring Terminal	144"	Curb	034-004-023

5 ABS FAULT LAMP HARNESS

Part#	Lamp Connection	Power Connection	Length	VMRS Code
66203	.180 Slim-Line Female	.180 Slim-Line Male	72"	034-004-023

6 REAR MARKER HARNESS

Part#	Lamp Connection	Power Connection	Length	VMRS Code
01-6707-A9	Turtleback® II	.180 Slim-Line Male	24"	034-004-042
01-6693-74	Thinline LED	.180 Slim-Line Male	24"	034-004-042
05-2018-47	.180 Slim-Line Female	.180 Slim-Line Male	24"	034-004-023

7 LICENSE LAMP HARNESS

Part#	Lamp Connection	Power Connection	Length	VMRS Code
66221	.180 Slim-Line Female	.180 Slim-Line Male	60"	034-004-023

8 REAR I.D. HARNESS

Part#	Lamp Connection	Power Connection	Length	VMRS Code
01-6707-C3	Turtleback® II	.180 Slim-Line Male	120" w/12" On Center Spacing	034-004-023
66402	Thinline LED	.180 Slim-Line Male	120" w/12" On Center Spacing	034-004-023
01-6621-A9	.180 Slim-Line Female	.180 Slim-Line Male	120" w/12" On Center Spacing	034-004-023

Lamp connection descriptions and information begins on page 255

© 2019 All Rights Reserved, Grote® Industries, Inc.

Ultra-Blue-Seal®
UBS

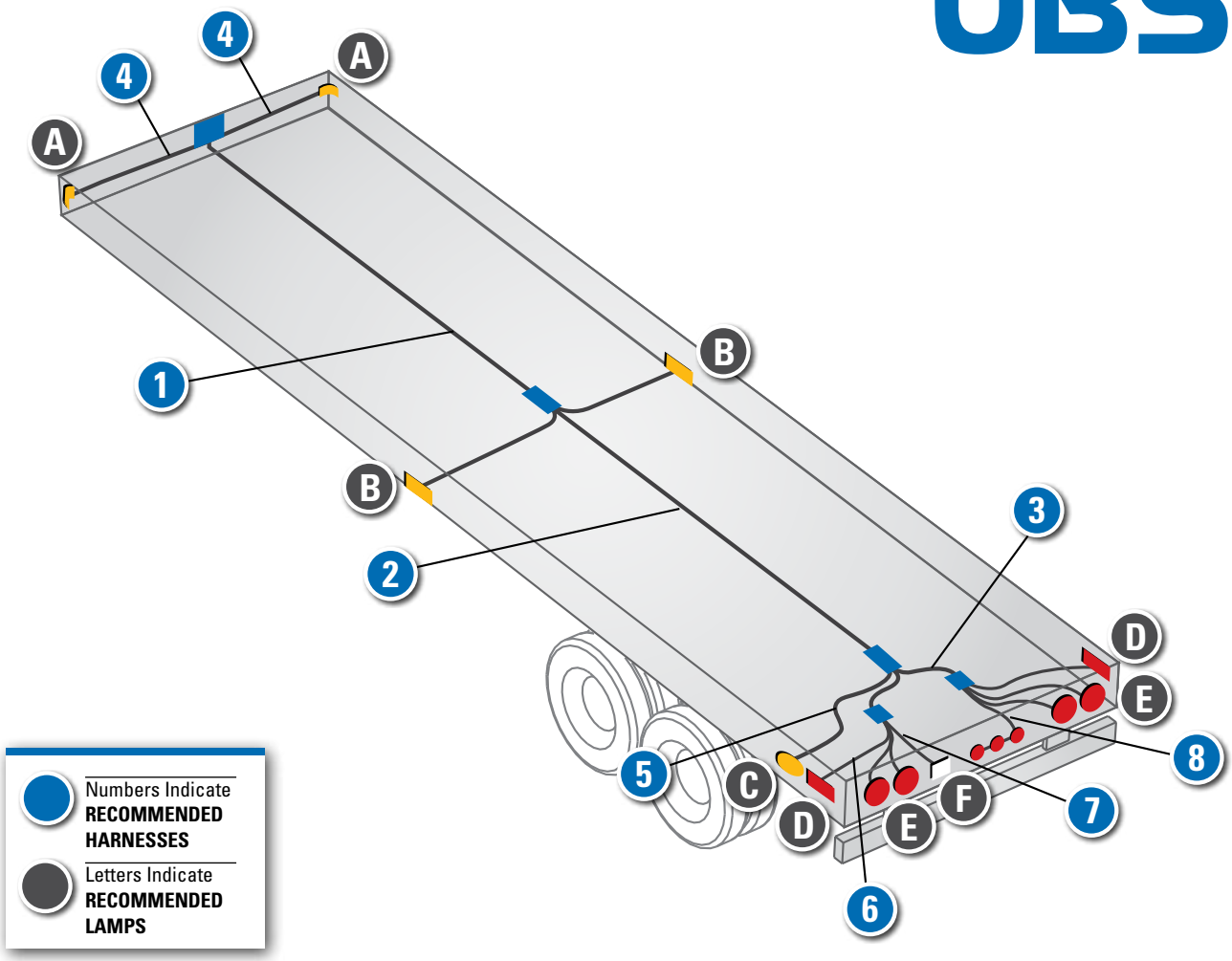

RECOMMENDED LAMPS

A FRONT MARKERS

SuperNova® 3" Thin-Line LED Clearance/Marker Lamp	Page 47
SuperNova® Sealed Turtleback® II LED Clearance/Marker Lamp	Page 55
MicroNova® DOT LED Clearance/Marker Lamp	Page 35
MicroNova® LED Clearance/Marker Lamp	Page 36

B MID-TURN

SuperNova® Oval LED Side Turn/Marker Lamp	Page 86

C ABS

MicroNova® DOT LED Clearance/Marker Lamp	Page 35
MicroNova® LED Clearance/Marker Lamp	Page 36

D REAR SIDE, CLEARANCE MARKERS & REAR I.D.

SuperNova® 3" Thin-Line LED Clearance/Marker Lamp	Page 47
SuperNova® Sealed Turtleback® II LED Clearance/Marker Lamp	Page 55
MicroNova® DOT LED Clearance/Marker Lamp	Page 35
MicroNova® LED Clearance/Marker Lamp	Page 36

E STOP/TAIL/TURN

SuperNova® 4" LED Stop/ Tail/ Turn Lamp	Page 75
SuperNova® 4" NexGen LED Stop/Tail/Turn	Page 77

F LICENSE

MicroNova® Multi-Volt LED License Lamp	Page 119
MicroNova® Multi-Volt DOT LED License Lamp	Page 119

 © 2019 All Rights Reserved, Grote® Industries, Inc.

53' FLATBED ULTRA-BLUE-SEAL® HARNESS SYSTEM

1 MAIN HARNESS

Part #	Front Connection	Curb Side	Road Side	Wire Gauge	Length	VMRS Code
01-6661-A2	Push-On	56"	56"	1-10, 6-12	375"	034-004-023
01-6660-M6	Push-On	108"	15"	1-10, 6-12	375"	034-004-023
01-6605-W3	#10 Ring Terminal	108"	15"	1-10, 6-12	375"	034-004-023
01-6606-X3	#10 Ring Terminal	56"	56"	1-10, 6-12	375"	034-004-023

2 INTERMEDIATE MAIN

Part #	Length	ABS Drop	Wire Gauge	VMRS Code
01-6605-W7	342"	132"	1-10, 6-12	034-004-023
01-6605-X4	288"	180"	1-10, 6-12	034-004-023

3 REAR SILL

Part #	Lamp Plug	Curb Side	Road Side	ABS Drop	VMRS Code
01-6758-86	Straight Male Pin	60"	50"	53"	034-004-023
01-6758-87	Straight Male Pin	89"	16"	18"	034-004-023

4 FRONT MARKER HARNESS

Part#	Lamp Connection	Power Connection	Length	Side	VMRS Code
01-6620-E9	.180 Slim-Line Female	.180 Slim-Line Male	48"	Road	034-004-023
66222	.180 Slim-Line Female	.180 Slim-Line Male	96"	Curb	034-004-023
01-6620-F1	.180 Slim-Line Female	.180 Slim-Line Male	48"	Road	034-004-023
01-6620-C8	.180 Slim-Line Female	#10 Ring terminal	96"	Road	034-004-023
01-6620-F2	.180 Slim-Line Female Flo-Thru	.180 Slim-Line Male	48"	Road	034-004-023
01-6621-C1	.180 Slim-Line Female Flo-Thru	.180 Slim-Line Male	96"	Curb	034-004-023
01-6620-F3	.180 Slim-Line Female Flo-Thru	#10 Ring Terminal	48"	Road	034-004-023
01-6621-C3	.180 Slim-Line Female Flo-Thru	#10 Ring Terminal	96"	Curb	034-004-023

5 ABS FAULT LAMP HARNESS

Part#	Lamp Connection	Power Connection	Length	VMRS Code
66203	.180 Slim-Line Female	.180 Slim-Line Male	72"	034-004-023

6 REAR MARKER HARNESS

Part#	Lamp Connection	Power Connection	Length	VMRS Code
01-6707-A9	Turtleback® II	.180 Slim-Line Male	24"	034-004-042
01-6693-74	Thinline LED	.180 Slim-Line Male	24"	034-004-042
05-2018-47	.180 Slim-Line Female	.180 Slim-Line Male	24"	034-004-023

7 LICENSE LAMP HARNESS

Part#	Lamp Connection	Power Connection	Length	VMRS Code
66221	.180 Slim-Line Female	.180 Slim-Line Male	60"	034-004-023

8 REAR I.D. HARNESS

Part#	Lamp Connection	Power Connection	Length	VMRS Code
01-6707-C2	Turtleback® II	.180 Slim-Line Male	36" w/12" On Center Spacing	034-004-023
66403	Thinline LED	.180 Slim-Line Male	36" w/12" On Center Spacing	034-004-023
01-6621-C7	.180 Slim-Line Female	.180 Slim-Line Male	36" w/9" On Center Spacing	034-004-023

Lamp connection descriptions and information begins on page 255

© 2019 All Rights Reserved, Grote® Industries, Inc.

GROTE® ULTRALINK POWER CORDS: SUPERIOR POWER DELIVERY

Grote's UltraLink Cords provide maximum reliability in the harshest environments. UltraLink Power Cords feature a crush-resistant plug and deliver improved performance, longer wear, and superior conductivity at a competitive price.

PLUG DESIGN

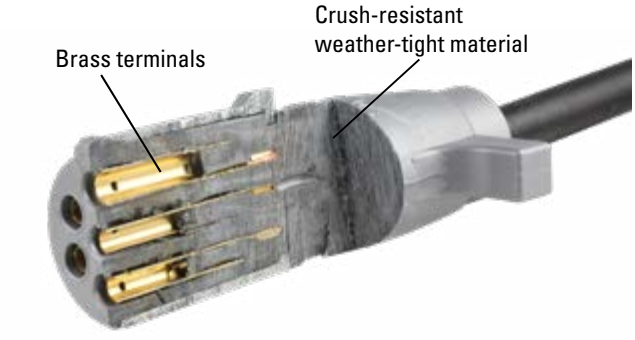

CABLE-TO-PLUG SEAL

Cable jacket is molded into the plug, sealing it from the elements and eliminating the need for an additional strain relief.

BRASS TERMINALS

Two rugged spring clips on each terminal prevent excessive opening of the terminals and greatly reduce intermittent connections.

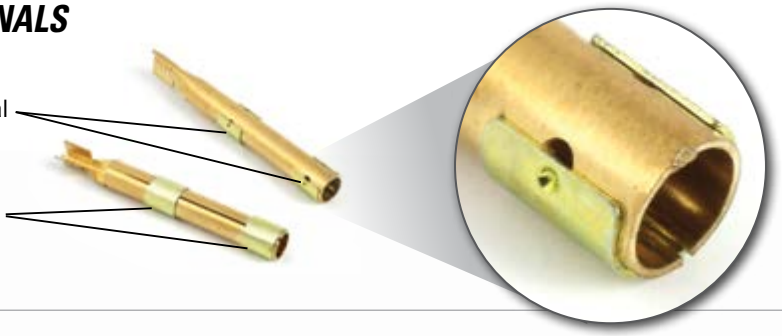

 © 2019 All Rights Reserved, Grote® Industries, Inc.

ULTRALINK ABS POWER CORDS

UltraLink power cords exceed minimum legal lamp power delivery requirements for single or double trailer configurations • Zinc die-cast plugs are filled with elastomeric material that resists crushing & acts as potting to seal solid brass terminals from moisture • Provides excellent recoil memory, chemical, and abrasion resistance • Adhesive bonds cable to plug, eliminating need for supporting spring and preventing moisture from entering the back of the plug • Solid brass terminals are corrosion resistant, and provide superior current capacity with minimal voltage drop • Advanced polymer jacketing material provides complete sealing and abrasion protection between -55°F and 190°F (premium versions)

COILED:

87100 1/8, 2/10, 4/12, 12', w/12" Leads, Coiled
87103 1/8, 2/10, 4/12, 12', w/12" Leads, Coiled, Premium
87101 1/8, 2/10, 4/12, 15', w/12" Leads, Coiled
87104 1/8, 2/10, 4/12, 15', w/12" Leads, Coiled, Premium
87105 1/8, 2/10, 4/12, 20', w/36" and 12" Leads, Coiled, Premium
87170 1/8, 2/10, 4/12, 15', w/48" and 12" Leads, Coiled

STRAIGHT:

87190 1/8, 2/10, 4/12, 7', Straight
87191 1/8, 2/10, 4/12, 8', Straight
87192 1/8, 2/10, 4/12, 9', Straight
87193 1/8, 2/10, 4/12, 10', Straight
87171 1/8, 2/10, 4/12, 12', Straight
87172 1/8, 2/10, 4/12, 15', Straight
87173 1/8, 2/10, 4/12, 20', Straight

Material: Polyurethane (Premium), EVA (Standard)
Regulations / Standards: SAE J560b™, J2222™, J2394™
Finish: Green
VMRS Code: 034-003-037

ULTRALINK POWER CORDS (NON-ABS)

UltraLink power cords exceed minimum legal lamp power delivery requirements for single or double trailer configurations • Zinc die-cast plugs are filled with elastomeric material that resists crushing & acts as potting to seal solid brass terminals from moisture • Adhesive bonds cable to plug, eliminating need for supporting spring and preventing moisture from entering the back of the plug • Solid brass terminals are corrosion resistant, and provide superior current capacity with minimal voltage drop

COILED:

87110 1/12, 6/14, 12', w/12" Leads
87020 1/10, 6/12, 12', w/12" Leads, HD
87111 1/12, 6/14, 15', w/12" Leads
87023 1/10, 6/12, 15', w/12" Leads, HD
87181 1/10, 6/12, 15', w/48" and 12" Leads, HD
87112 1/12, 6/14, 15', w/72" and 12" Leads
87180 1/10, 6/12, 15', w/72" and 12" Leads, HD

STRAIGHT:

87182 1/10, 6/12, 15'

Material: EVA (Standard)
Regulations / Standards: SAE J560™, J2222™
Finish: Black
VMRS Code: 034-003-037

© 2019 All Rights Reserved, Grote® Industries, Inc.

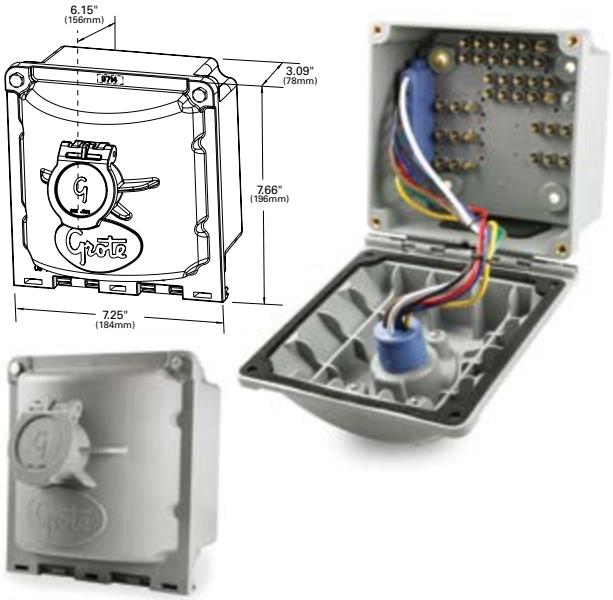

ULTRA NOSE BOX

Replaceable 7-pin insert for easy maintenance • 39-pin connections eliminates overcrowding of wires • Hinged door keeps elements out, while providing easy access • Insert-molded pins helps prevent accidental disconnects

87141 Gray, Solid Pin
87151 Gray, Split Pin

Material: Nylon
Regulations / Standards: SAE J560™
Finish: Gray
Accessory: 7-pin insert: 97900 (solid pin), 97800 (split pin)
Replacement Door, Largo, Solid Pin: 97831
Rubber Grommet: 97810
Pigtail: 01-6623-P9
20A Circuit Breaker: 01-6624-W4
VMRS Code: 034-003-034

ULTRA-PIN RECEPTACLE TWO-HOLE MOUNT

No-rust, die-cast zinc • Heavy bosses for extra rigidity • Barrel slanted to drain moisture • Mounting holes slotted for universal fit • Floating pins for easy alignment and solid mating • Two male terminals for grounding • Brass pins • 87270 includes 99510 retrofit kit • 99510 consists of 14 terminals and 9 boots

87250 Receptacle Only, Split Pin
87860 Receptacle Only, Solid Pin
87270 Receptacle w/ Terminal Kit, Split Pin

RETROFIT KIT

99510 Plug-In Terminal Kit
99680 Door Replacement Kit

Material: Die-cast Zinc
Regulations / Standards: SAE J560™
VMRS Code: 034-003-034 - 87250, 57260, 87270, 99680
034-004-023 - 99510

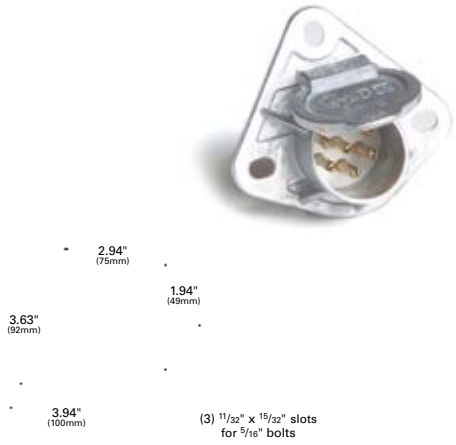

ULTRA-PIN RECEPTACLE THREE-HOLE MOUNT

No-rust, die-cast zinc • Heavy bosses for extra rigidity • Barrel slanted to drain moisture • Mounting holes slotted for universal fit • Floating pins for easy alignment and solid mating • Two male terminals for grounding • Brass pins • 87240 includes 99510 retrofit kit • 99510 consists of 14 terminals and 9 boots

87240 Receptacle w/ Terminal Kit, Split Pin
87220 Receptacle Only, Split Pin

RETROFIT KIT

99510 Plug-In Terminal Kit
99680 Door Replacement Kit

Material: Die-cast Zinc
Regulations / Standards: SAE J560™
VMRS Code: 034-003-034 - 87240, 87220, 99680
034-004-023 - 99510
034-004-075 - 99601

 © 2019 All Rights Reserved, Grote® Industries, Inc.

ULTRA-PIN RECEPTACLE FOUR-HOLE MOUNT NOSE BOX

Extra-heavy bosses • Slanted barrel for drainage • Floating pins for easy alignment and solid mating connection • High-impact retainer plate • Brass pins • Die-cast aluminum housing resists rust

87590 Solid Pin
87830 Split Pin

Material: Die-cast Aluminum
VMRS Code: 034-003-034

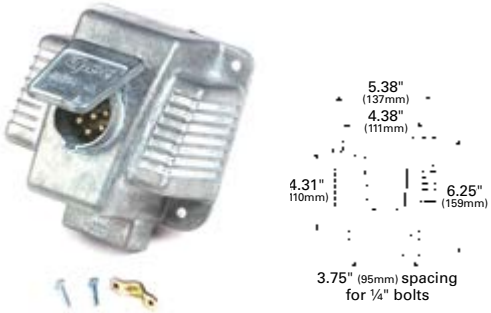

RECEPTACLE MOUNTING BOX

Mounting for 87250, 87860, 87270, 87220, 87850, 87240

43684 Receptacle Box
99680 Door Replacement Kit - Used on 87250, 87860, 87270, 87240 and 87220. Kit contains die-cast zinc door, brass hinge pin and spring

Material: Cast Aluminum
VMRS Code: 034-003-034

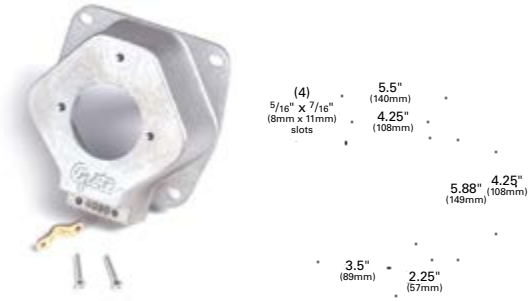

RETROFIT PLUG-IN TERMINAL KIT

99510 Plug-In Terminal Kit - Plugs into 87220, 87850, 87250, 87860, 87590 and 87830 receptacles • Kit contains 9 boots and 14 terminals • 5 terminals for larger gauge wire

99680 Door Replacement Kit - Used on 87250, 87860, 87270, 87240 and 87220. Kit contains die-cast zinc door, brass hinge pin and spring

VMRS Code: 034-004-023 - 99510
034-003-034 - 99680
034-004-075 - 99601

© 2019 All Rights Reserved, Grote® Industries, Inc.

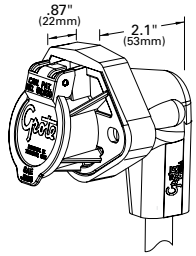

87212

87214

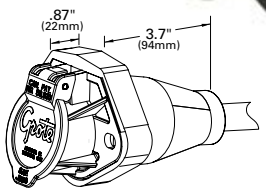

ULTRA-SEAL G7

Ultra-Seal G7 is the standard for low-profile, water-resistant harness connection • Spacer made of thicker and harder durometer PVC that resists deforming under mounting pressure • Flush-mount design allows water to be directed away from the wire exit hole in the trailer • Two alignment pins aid in installation, allowing for easier terminal connections • Plug design seals the back of the receptacle • Receptacle is recessed into the gasket for sealing • Receptacle is non-rust, die-cast zinc with solid brass pins

87214 Straight Plug & Receptacle With 7-Way Female
Length: 24"/610mm
Gauge: 1/10, 6/12

87215 Straight Plug & Receptacle With 7-Way Male
Length: 24"/610mm
Gauge: 1/8, 2/10, 4/12

87210 90º Plug & Receptacle With 7-Way Female And Drops For Marker Lamps (Grounded And Black)
Length: 24"/610mm
Gauge: 1/10, 6/12

87211 90º Plug & Receptacle With 7 Standard Females And Drops For Marker Lamps (Grounded And Black)
Length: 24"/610mm
Gauge: 1/10, 6/12

87212 90º Plug & Receptacle Blunt Cut With Drops For Marker Lamps (Grounded And Black)
Length: 24"/610mm
Gauge: 1/10, 6/12

VMRS Code: 034-002-036

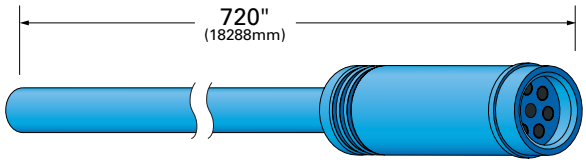

ULTRA-BLUE-SEAL® MAIN HARNESS

Extends from front of nose box or receptacle and provides sealed plug-in connection to real sill harness

1-8 GAUGE, 2-10 GAUGE, 4-12 GAUGE:

66071 60' Long

VMRS Code: 034-004-023

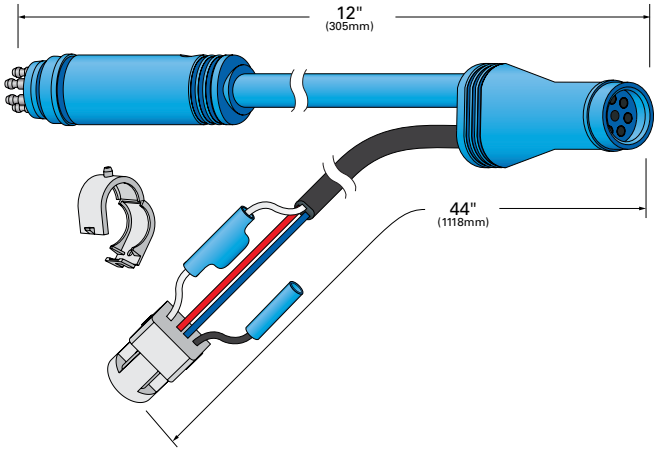

ULTRA-BLUE-SEAL® MAIN HARNESS ABS ADAPTER

Junction between main harness and real sill harness • Provides sealed plug-in connection and a drop-out extension for ABS • Ground return • ABS fault lamp connection

ABS FAULT LIGHT:

66705 12" Long

VMRS Code: 034-004-023

 © 2019 All Rights Reserved, Grote® Industries, Inc.

ULTRA-BLUE-SEAL® 7-CONDUCTOR RECEPTACLE MAIN HARNESS

Ultra-Pin receptacle is overmolded • Two-hole mount, solid pin (87860)

01-6608-E9 Main Harness with Drop (female 7-way)
01-6608-F9 Main Harness (male 7-way)

VMRS Code: 034-004-023

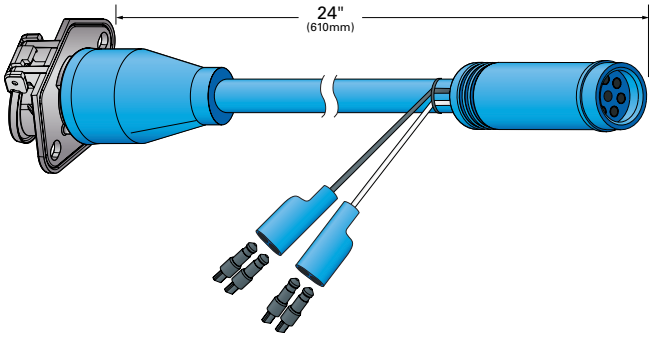

ULTRA-BLUE-SEAL® HARNESS REAR SILL OPTION

All connections weather-sealed by simple, foolproof UBS plugs • Entire harness double-jacketed for extra resistance to road-splash and abrasion • Redundant frame ground with ring terminal

FOR FEMALE PIN LAMPS:

67570 56" Long, Ground Return, Blue Drop
67571 56" Long, Ground Return, ABS Connection

FOR MALE PIN LAMPS:

67581 56" Long, Ground Return, Blue Drop
67580 56" Long, Ground Return, ABS Connection

VMRS Code: 034-004-023

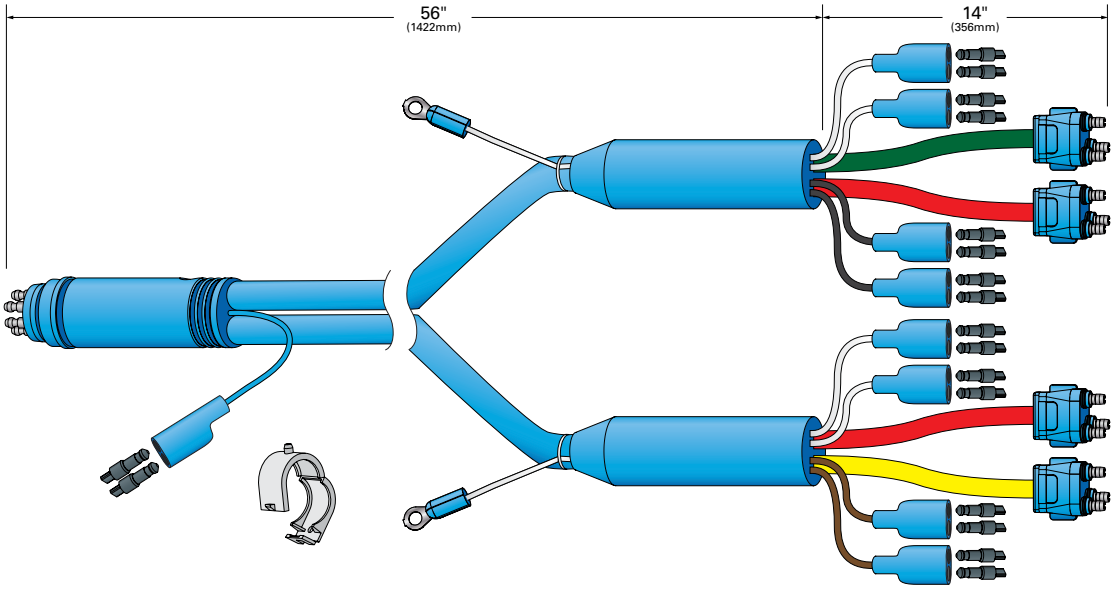

© 2019 All Rights Reserved, Grote® Industries, Inc.

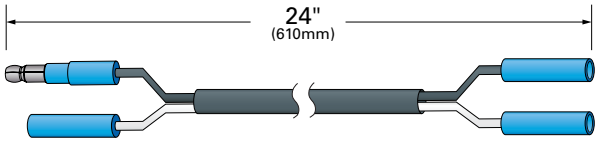

ULTRA-BLUE-SEAL® GROUND RETURN TRACKING HARNESS

For use with elbow-style rear sill

STANDARD MALE/STANDARD FEMALE TO 2 SLIM-LINE UNDERLAMP FEMALES:

66223 2' Long
66224 3' Long

VMRS Code: 034-004-023

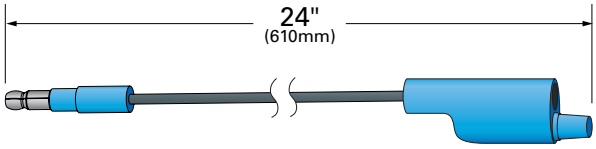

CUT-TO-FIT® WIRE HARNESS SYSTEMS

This Cut-To-Fit® Wire Harness System adapts to the standard Grote® Ultra-Blue-Seal® rear sill and main harness • Part number 67271 (24" standard male to Cut-To-Fit® Slim-Line jumper) plugs into rear sill, making a corrosion-proof connection • Cut-To-Fit® jumpers can then be plugged directly into the double Slim-Line plugs • Cut-To-Fit® wire harness mates with the Grote® 7-pin receptacle (nose box) with the use of either the 67260 adapter or the 67250 • All wires 12-gauge

67271 Rear Sill Adapter
67260 Nose Box Adapter
67250 Double Nose Box Adapter

VMRS Code: 034-004-023

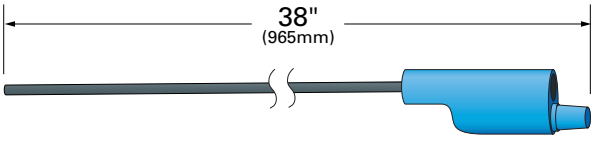

SLIM-LINE UNDER-LAMP FEMALES (CUT-TO-FIT®)

Abrasion-resistant double-jacketed wire lengths with molded-on Slim-Line under-lamp double females includes sealing boot for crimp-on bullet connectors • Blunt-cut, Cut-To-Fit® wires are black

67301 14-Gauge, 3' 2" (38")

VMRS Code: 034-004-023

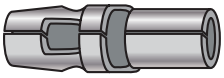
99500-3

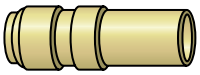
99501-3

CRIMP-ON .180 BULLET TERMINALS

99500-3 Field Service Terminal for 14-Gauge Wire
99501-3 Field Service Terminal for 12-Gauge Wire

VMRS Code: 034-004-023

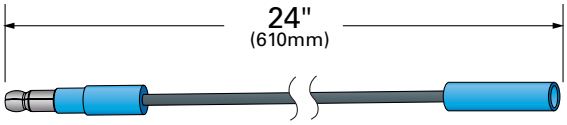

STANDARD MALE TO SLIM-LINE UNDER-LAMP FEMALE

Rear tracking lamp jumper

66170 2' (24")

VMRS Code: 034-004-023

 © 2019 All Rights Reserved, Grote® Industries, Inc.

STANDARD MALE TO STANDARD FEMALE

66100 - License lamp jumper (as shown) • 66101 - Intermediate turn signal jumper, use with 66200 from front receptacle

66100 4' 4" (50")
66101 28' 3" (339")

VMRS Code: 034-004-023

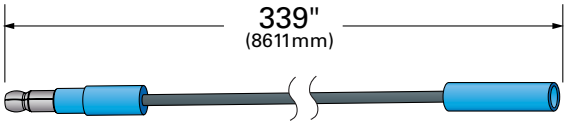

SLIM-LINE UNDER-LAMP MALE TO STANDARD FEMALE

Jumper to access auxiliary drop-out on rear sill harness

66110 5' (60")

VMRS Code: 034-004-042

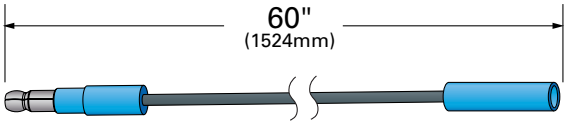

SLIM-LINE UNDER-LAMP MALE TO SLIM-LINE UNDER-LAMP FEMALE

66162 Intermediate Side Marker Crossover Jumper, 8' 9" (105")

VMRS Code: 034-004-023

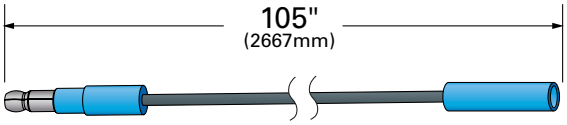

SLIM-LINE UNDER-LAMP MALE TO SLIM-LINE UNDER-LAMP FEMALE

66160 Multiple ID lamp jumper, 1' (12")
66124 Front marker and rear marker lamp jumper, 2' 6" (30")
66161 Front lower side marker from front receptacle. Use with 66190, 4' 7" (55")
66125 Marker lamp jumper, 7' (84")
66123 Marker lamp jumper, 10' 9" (129")
66163 Front upper clearance / marker from front receptacle. Use with 66190, 12' 8" (152")
66122 Marker lamp jumper 16' (192")
66113 Clearance lamp jumper 26' 11" (323")

VMRS Code: 034-004-023

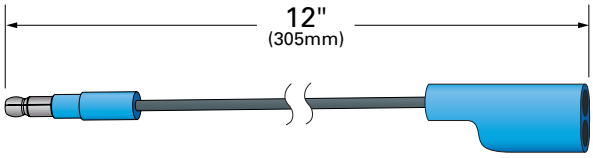

BLUNT-CUT TO DOUBLE SLIM-LINE UNDER-LAMP FEMALE

66190 Wire into front receptacle terminals, 8" blunt cut

VMRS Code: 034-004-023

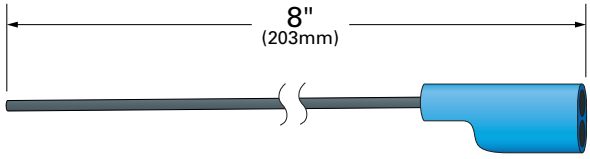

© 2019 All Rights Reserved, Grote® Industries, Inc.

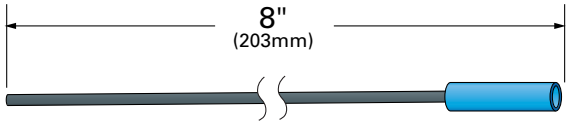

BLUNT-CUT TO STANDARD FEMALE

66200 Wire into front receptacle terminals, 8" blunt cut

VMRS Code: 034-004-023

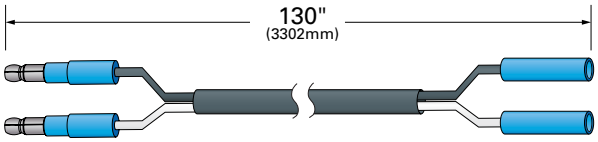

TWO STANDARD MALES TO TWO SLIM-LINE UNDER-LAMP FEMALES

66220 - Use the 5306 combination clearance / marker and auxiliary stop / turn signal lamp, use with 66400 when triple-ID / Auxiliary stop is located on upper rail, 10' 10" (130") • Wire is 14 gauge

66220 ID / auxiliary stop jumper
66121 Midturn and marker lamp harness, 30' (360")

VMRS Code: 034-004-023

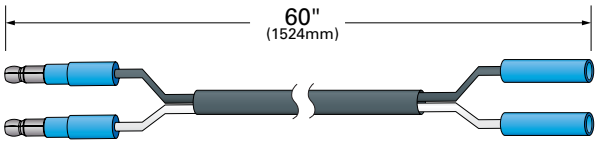

TWO SLIM-LINE MALES TO TWO SLIM-LINE UNDER-LAMP FEMALES

66221 Marker lamp or ABS fault lamp, 5' (60")
66222 Jumper, 8' (96")
66164 Jumper, 8' 9" (105")

VMRS Code: 034-004-023

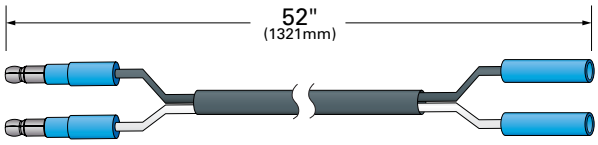

TWO STANDARD MALES TO TWO STANDARD FEMALES

66133 Marker lamp jumper, 4' 4" (52")

VMRS Code: 034-004-023

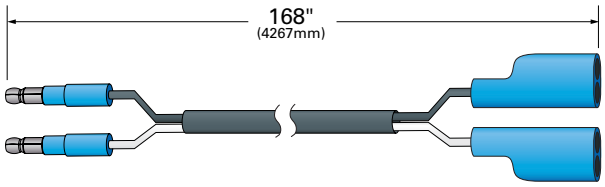

TWO STANDARD MALES TO TWO DOUBLE FEMALES

66171 Marker lamp jumper, 14' (168")
66145 Marker lamp jumper, 26' (312")

VMRS Code: 034-004-023

 © 2019 All Rights Reserved, Grote® Industries, Inc.

TWO SLIM-LINE MALE TO TWO DOUBLE FEMALES

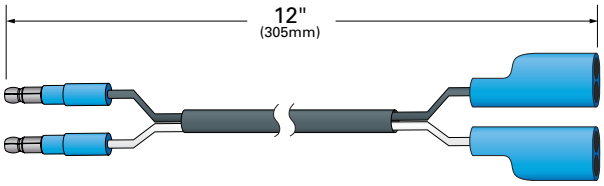

66165 Marker lamp jumper, 1' (12")
66155 Marker lamp jumper, 2' 6" (30")
66154 Marker lamp jumper, 4' 7" (55")
66153 Marker lamp jumper, 7' (84")
66152 Marker lamp jumper, 10' 9" (129")
66151 Marker lamp jumper, 12' 8" (152")
66150 Marker lamp jumper, 16' (192")
66135 Marker lamp jumper, 26' 11" (323")

VMRS Code: 034-004-023

7-CONDUCTOR CABLE:
(SAE J1067™ AND J560™)

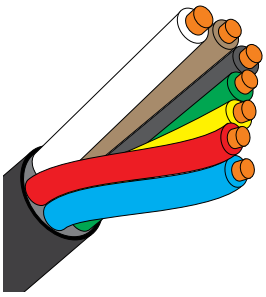

White	Ground (10 ga.)
Brown	Tail and license lamp, and clearance lamps (12 ga.)
Black	Clearance, sidemarker, and identification lamps (12 ga.)
Yellow	Left turn signal lamp (12 ga.)
Green	Right turn signal lamp (12 ga.)
Red	Stop lamps (12 ga.)
Blue	Auxiliary circuit (12 ga.)

HEAVY DUTY 7-CONDUCTOR CABLE SYSTEM:
(SAE J1067™ AND J560™)

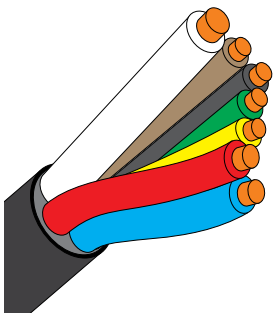

White	Ground (8 ga.)
Brown	Tail and license lamp, and clearance lamps (12 ga.)
Black	Clearance, sidemarker, and identification lamps (12 ga.)
Yellow	Left turn signal lamp (12 ga.)
Green	Right turn signal lamp (12 ga.)
Red	Stop lamps (10 ga.)
Blue	Auxiliary circuit (10 ga.)

© 2019 All Rights Reserved, Grote® Industries, Inc.

WIRE SIZES

No matter what the variety, it's critical to choose the correct wire size for the application. The key information required is the length of wire needed, often referred to as the length of run, and the current load that the conductor is expected to carry in use. Knowing the "length and load" characteristics will take the guesswork out of the choice.

Voltage drop, caused by current draw, is the primary consideration when selecting the proper conductor size. Every conductor has a certain amount of resistance per foot. The longer the distance, the greater the resistance in the circuit. The greater the resistance, the higher the voltage drop caused by the same current. This relationship is defined by Ohm's law (Voltage = Current x Resistance). As distance from the power source increases, there is less voltage available to "push" the current through the wire. This causes the current to drop. There is also heat buildup as the resistance increases, which also lessens the amount of current flow.

In low-voltage systems, such as vehicles, even a small drop in voltage can have a serious effect on the amount of light a lamp puts out. There's a simple solution. As you get further away from the power source, make the conductor larger. A larger conductor means less resistance.

Using the Wire Size Chart, first find the load in amps on the left edge of the chart. Then find the length of run across the top of the chart. Read down that column until it intersects with the amp load line. The point at which they cross indicates the correct wire size for the job.

Wire Size Chart

12V (AMP)	24V	48V	Length of Wire (most distant light)									
			10'	20'	30'	40'	50'	60'	70'	80'	90'	100'
Load in Amps	Load in Amps	Load in Amps	Wire Gauge	Wire Gauge	Wire Gauge	Wire Gauge	Wire Gauge	Wire Gauge	Wire Gauge	Wire Gauge	Wire Gauge	Wire Gauge
1	2	4	18	18	18	18	18	18	18	18	18	18
1.5	3	6	18	18	18	18	18	18	18	18	18	18
2	4	8	18	18	18	18	18	18	18	16	16	16
3	6	12	18	18	18	18	18	16	16	16	14	14
4	8	16	18	18	18	16	16	16	14	14	14	12
5	10	20	18	18	18	16	14	14	14	12	12	12
6	12	24	18	18	16	16	14	14	12	12	12	10
7	14	28	18	18	16	14	14	12	12	12	12	10
8	16	32	18	16	16	14	12	12	12	10	10	10
10	20	40	18	16	14	12	12	12	10	10	10	10
11	22	44	18	16	14	12	12	10	10	10	10	8
12	24	48	18	16	14	12	12	10	10	10	8	8
15	30	60	18	14	12	12	10	10	10	8	8	8
18	36	72	16	14	12	10	10	8	8	8	8	8
20	40	80	16	12	12	10	10	8	8	8	8	6

A) DETERMINE THE TOTAL WIRE LENGTH FROM THE POWER SOURCE TO THE MOST DISTANT POINT IN THE CIRCUIT.
B) DETERMINE THE TOTAL ELECTRICAL LOAD ON THE CIRCUIT.
C) FIND THE LOAD ALONG ONE EDGE OF THE CHART DEPENDING ON THE VEHICLE VOLTAGE IN QUESTION, TAKING THE NEXT HIGHER LOAD IF THE INDICATED LOAD FALLS BETWEEN TWO POINTS ON THE CHART.
D) FIND THE CABLE LENGTH REQUIRED ON THE TOP OF THE CHART, TAKING THE NEXT HIGHER LENGTH (IF EXACT LENGTH IS NOT CITED).
E) AT THE INTERSECTION OF THE LENGTH AND LOAD COLUMN, READ THE MINIMUM SIZE WIRE REQUIRED FOR THAT PARTICULAR CIRCUIT.

 © 2019 All Rights Reserved, Grote® Industries, Inc.

WIRE GAUGES

Conductors may be single strand or a group of strands. Stranded conductors are preferred in heavier gauges because they are more flexible and easier to work with than a comparable single strand conductor.

Comparing stranded cable sizes is simple. Stranded cable is compared using a numerical system. For example, 18/24 indicates that the conductor consists of 18 strands of 24-gauge wire. Similarly 12/12 refers to 12 strands of 12-gauge wire.

Gauge refers to the size of the conductor in a wire. The higher the gauge number, the smaller the wire. For example, an 18-gauge wire is smaller than a 12-gauge wire. And a 4-gauge wire has more than twice the diameter of a 10-gauge wire.

When the wire size gets larger, the number reaches #0 gauge or 1/0 (one aught). Additional zeros refer to larger sizes. The next larger size above 1/0 is #00 or 2/0 (two aught).

The capacity of a wire reflects the ability it has to carry electrical current. For example, over a distance of 50 feet, a 12-gauge wire can safely carry 10 amps. Over the same distance a 16-gauge wire can carry 3 amps. Choosing the size wire is made easier using a wire size chart.

Just remember the thicker the wire, the smaller the amperage loss.

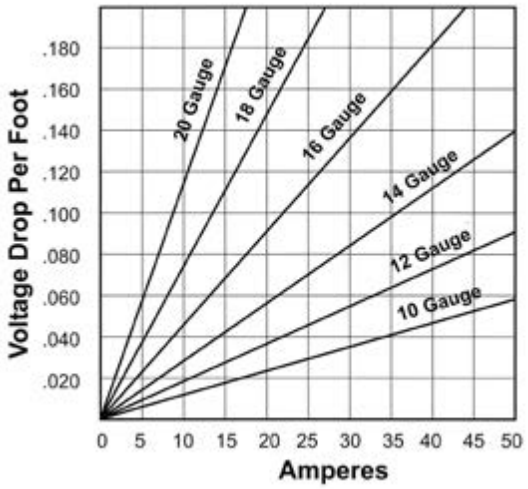

Wire Gauge Chart

GAUGE	S.W.G.	A.W.G. (inches)	A.W.G. (mm)	Actual Size (A.W.G.)
00	0.348	0.368	9,266	
0	0.324	0.325	8,252	
1	0.300	0.289	7,348	
2	0.276	0.258	6,543	
3	0.252	0.229	5,827	
4	0.232	0.204	5,189	
5	0.212	0.182	4,621	
6	0.192	0.162	4,115	
7	0.176	0.144	3,665	
8	0.160	0.129	3,264	
9	0.144	0.114	2,906	
10	0.128	0.102	2,588	
11	0.116	0.091	2,304	
12	0.104	0.081	2,052	
13	0.092	0.072	1,829	
14	0.080	0.064	1,628	
15	0.072	0.057	1,450	
16	0.064	0.051	1,291	
17	0.056	0.045	1,150	
18	0.048	0.040	1,024	
19	0.040	0.036	0,912	
20	0.036	0.032	0,813	
21	0.032	0.029	0,724	
22	0.028	0.025	0,643	

A.W.G. = American Wire Gauge
S.W.G = Imperial Standard Wire Gauge (British legal standard)

© 2019 All Rights Reserved, Grote® Industries, Inc.

13

PIGTAILS

SPIRALES DE RACCORD

CONECTORES

WWW.GROTE.COM | © 2019 All Rights Reserved, Grote® Industries, Inc.

ULTRA-BLUE-SEAL® MOLDED PLUGS COMMONLY USED IN TRAILER HARNESS APPLICATIONS

MALE PIN

- Double Seal
- Grease slot

90° MALE PIN

- Double Seal
- Grease slot

FEMALE PIN - PL3

- Double Seal
- 90°

CLEARANCE MARKER

- Designed to fit surface mounting brackets

MARKER LAMP PLUG - PL10

- Double Seal
- Available in flow-through applications

THIN LINE PLUG

- Double Seal
- Grease slot
- Available in flow-through applications

SENTRY LAMP

- Available in 2-way and 3-way configurations

HARD SHELL

- Available in 2-way and 3-way configurations

TURTLEBACK PLUG

- Double Seal
- Available in flow-through applications

.180 SLIMLINE AND STANDARD OPTIONS

- Available in flow-through applications

GROTE'S DOUBLE SEAL ADVANTAGE

The Double Seal is a molded-in circular ring in each connector that corresponds to a mating ring on the lamp. The inner sealing ring covers the terminal area. The outer ring double seals around the outside area of the lamp plug connection.

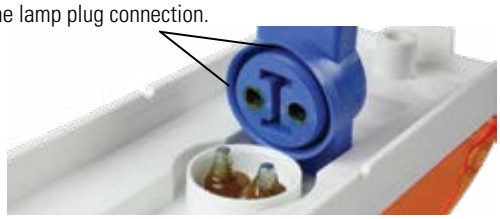

GROTE'S MALE PIN TERMINATION

Center grease reservoir, plus side locking tabs on the lamp protect against hydraulic pressure forcing connection open.

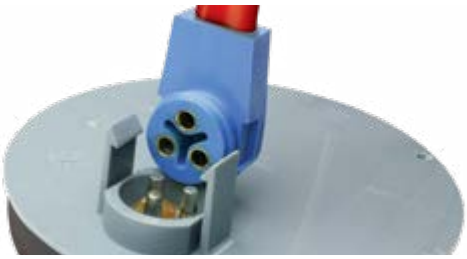

© 2019 All Rights Reserved, Grote® Industries, Inc.

66930

66931

THIN-LINE LED PIGTAILS

Factory-molded plugs for use with ULTRA-BLUE-SEAL® trailer wiring system • Uses patented double-seal protection • Grease grooves for additional sealing protection • Slim-Line .180 male bullets

66930 5" Long, Chassis Ground System
66931 6" Long, Ground Return

VMRS Code: 034-004-042

67001

66850

66851

66801

67050

66840

66800

SEALED MARKER LAMP PIGTAILS

Factory-molded plugs for use with ULTRA-BLUE-SEAL® trailer wiring system • Double seal resists corrosion • Fits 2" and 2 1/2" round and beehive-style LED and incandescent lamps • Slim-Line .180 male bullets

DOUBLE SEAL:

67001 6" Long, Ring Terminal Ground, Blunt Cut Wire
66850 6" Long, Chassis Ground
66851 6" Long, Ground Return

SINGLE SEAL:

66801 6" Long, Ground Return
67050 6" Long, Ring Terminal Ground, Blunt Cut Wire
67050-5 6" Long, Ring Terminal Ground, Blunt Cut Wire RETAIL
66840 6" Long, Chassis Ground, Standard .180 Male
66800 6" Long, Chassis Ground, Slim-Line .180 Male

VMRS Code: 034-004-042

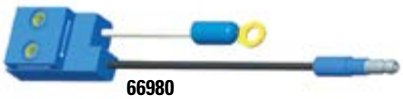
66980

66981

66982

CLEARANCE / MARKER PIGTAILS

Factory-molded plugs for use with ULTRA-BLUE-SEAL® trailer wiring system • Fits 4674 series clearance / marker lamps, and 4709 and 6029 / 6030 license and utility lamps • Pigtail designed to be integral part of mounting bracket (43780)

66980 6" Long, Chassis Ground, Slim-Line .180 Male
66981 6" Long, Universal Replacement, Blunt Cut, Ring Terminal Grommet
66982 8" Long, Ground Return

VMRS Code: 034-004-042

 © 2019 All Rights Reserved, Grote® Industries, Inc.

MARKER LAMP PIGTAIL

Fits all Grote® 2-bulb marker lamps with flag terminals, including 4526-, 4546-, 4593-, 4630-, 4678- and 4679- series lamps

67120 7 3/4" Long, .180 Slim-Line Male

VMRS Code: 034-004-023

67120

SEALED, ECONOMY CLEARANCE/ MARKER LAMP PIGTAIL

Fits 4607- series lamps

66360 6 3/4" Long w/ 3/8" Wire Strip

VMRS Code: 034-002-031

66360

TURTLEBACK® II DOUBLE-SEAL LAMP PIGTAILS

Factory-molded plugs for use with ULTRA-BLUE-SEAL® trailer wiring system • Pigtail for 4680-, 4684-, 4686- and 4687- series lamps • All connections fit under lamps

66910 6" Long, Chassis Ground, Slim-Line .180 Male
66911 6" Long, Ground Return, Standard .180 Male
67070 2 1/2" Long, Ground Wire, Standard .180 Male
67071 Two-Wire, Standard .180 Male

VMRS Code: 034-004-042

66910

66911

67070

67071

SENTRY LAMP PIGTAILS

Factory-molded plugs for use with ULTRA-BLUE-SEAL® trailer wiring system • Sealed plug-in pigtail for 5206-, 5202-, and 5306- lamps • O-ring helps prevent moisture and corrosion

66900 6" Long, Chassis Ground, Slim-Line .180 Male, 3 1/2" Ground, Star Ring Terminal
66904 6" Long, Ground Return, Slim-Line .180 Male
66905 6" Long, Chassis Ground, Slim-Line .180 Male

VMRS Code: 034-004-042

66900

66904

66905

SENTRY HIGH-MOUNT STOP PIGTAIL

Fits 54012 lamp • Sealing ring to lamp base • O-ring resists moisture and corrosion

66902 6" Long, Slim-Line .180 Male, 3" Ground, Star Ring Terminal

VMRS Code: 034-004-042

66902

© 2019 All Rights Reserved, Grote® Industries, Inc.

HIGH-MOUNT STOP LAMP PIGTAIL

Factory-molded plugs for use with the ULTRA-BLUE-SEAL® trailer wiring system • Fits 4925 series lamps for use in HMSL applications

66870 12 1/2" Long, Slim-Line .180 Male

VMRS Code: 034-004-042

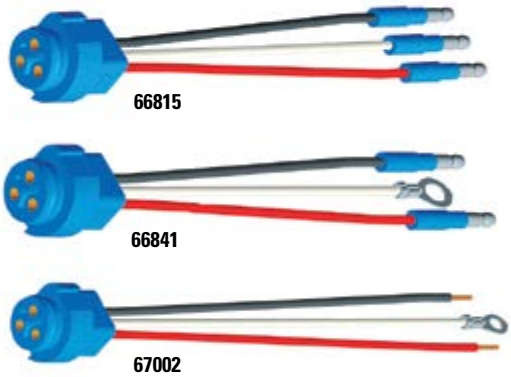

STOP/TAIL/TURN THREE-WIRE PLUG-IN PIGTAILS FOR MALE PIN LAMPS

Dual function for S/T/T lamps • O-ring seal resists moisture and corrosion • Quality ULTRA-BLUE-SEAL® construction • Grease grooves for additional sealing protection

66815 6" Long, Ground Return, Slim-Line .180 Male
66841 8" Long, Chassis Ground, Slim-Line .180 Male
67002 11" Long, Chassis Ground, Blunt Cut Wire

VMRS Code: 034-002-031

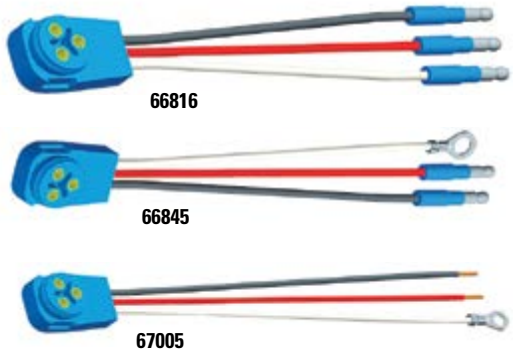

STOP/TAIL/TURN THREE-WIRE 90° PLUG-IN PIGTAILS FOR MALE PIN LAMPS

Dual function for S/T/T lamps • O-ring seal resists moisture and corrosion • 90° plug for reduced clearance applications • Quality ULTRA-BLUE-SEAL® construction • Grease grooves for additional sealing protection

66816 6" Long, Ground Return System, 90° Plug, Slim-Line .180 Male
66845 8" Long, Chassis Ground, 90° Plug, Slim-Line .180 Male
67005 11" Long, Chassis Ground, 90° Plug, Blunt Cut Wires

VMRS Code: 034-002-031

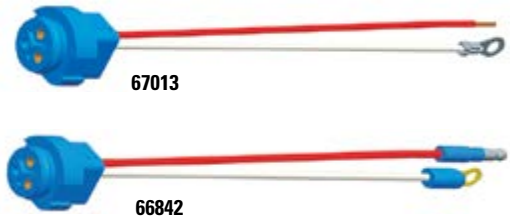

SINGLE FUNCTION TWO-WIRE PLUG-IN PIGTAILS FOR MALE PIN LAMPS

Straight-in pigtail • Single function • O-ring seal resists moisture and corrosion • Quality ULTRA-BLUE-SEAL® construction • Grease grooves for additional sealing protection

67013 11" Long, Chassis Ground, Blunt Clut Wire
66842 10" Long, Chassis Ground, Slim-Line .180 Male

VMRS Code: 034-002-031

 © 2019 All Rights Reserved, Grote® Industries, Inc.

SINGLE-FUNCTION TWO-WIRE 90° PLUG-IN PIGTAILS FOR MALE PIN LAMPS

Factory-molded plugs for use with quality ULTRA-BLUE-SEAL® trailer wiring system • 90° plug for reduced clearance applications • Single function • O-ring seal resists moisture and corrosion • Grease grooves for additional sealing protection

66846 10" Long, Chassis Ground, 90° Plug, Slim-Line .180 Male
67016 11" Long, Chassis Ground, 90° Plug, Blunt Cut Wires

VMRS Code: 034-002-031

66846

67016

STOP/TAIL/TURN THREE-WIRE PLUG-IN PIGTAILS FOR FEMALE PIN LAMPS

Dual function for S/T/T lamps • Factory molded plugs for use with ULTRA-BLUE-SEAL® trailer wiring system

66812 6" Long, Chassis Ground, Slim-Line .180 Male
66825 8" Long, Ground Return, Slim-Line .180 Male
67000 11 1/2" Long, Chassis Ground, Blunt Cut Wires

VMRS Code: 034-002-031

66812

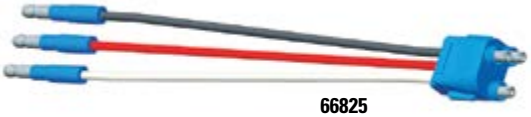
66825

67000

STOP/TAIL/TURN THREE-WIRE 90° PLUG-IN PIGTAILS FOR FEMALE PIN LAMPS

Factory-molded plugs for use with ULTRA-BLUE-SEAL® trailer wiring system • Dual function for S/T/T lamps

66811 18" Long, Chassis Ground, Slim-Line .180 Male, Star Ring Terminal
66843 18" Long, Chassis Ground, Blunt Cut Wires, Star Ring Terminal
66844 18" Long, Ground Return, Slim-Line .180 Male

VMRS Code: 034-002-031

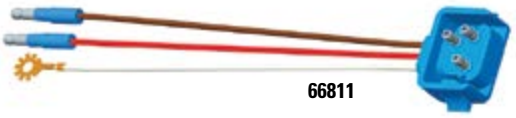
66811

66843

66844

UNIVERSAL 3-WIRE 90° PLUG-IN PIGTAIL FOR FEMALE-PIN LAMPS

90° construction for reduced clearance applications • Dual function for S/T/T lamps • Mates to Grote® and competitive lamps with female termination

67090 13" Long, Chassis Ground, 90° Plug, Blunt Cut Wires
67090-5 13" Long, Chassis Ground, 90° Plug, Blunt Cut Wires RETAIL

VMRS Code: 034-002-031

67090

© 2019 All Rights Reserved, Grote® Industries, Inc.

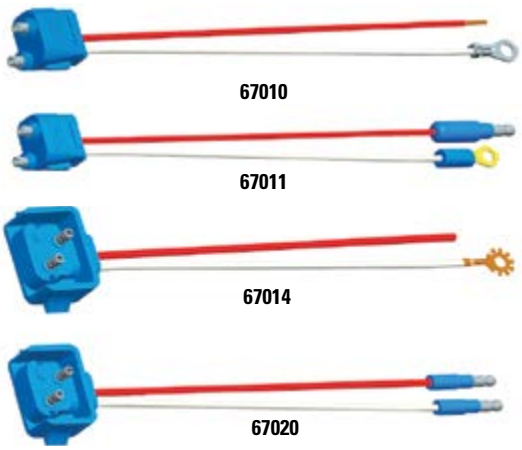

TWO-WIRE PLUG-IN PIGTAILS FOR FEMALE-PIN LAMPS

Factory-molded plugs for use with ULTRA-BLUE-SEAL® trailer wiring system
• Single function • Includes dummy pin to help guide the pigtail into lamp

STRAIGHT:

67010 11 1/2" Long, Chassis Ground, Blunt Cut
67011 10 1/4" Long, Chassis Ground, Standard .180 Male

90° PLUG:

67014 10" Long, Chassis Ground, Blunt Cut
67020 10" Long, Ground Return, Slim-Line .180 Male

VMRS Code: 034-002-031

TRIPLE-LAMP ID HARNESSES

Designed for use with ULTRA-BLUE-SEAL® wiring system • Factory-molded plugs resist moisture and corrosion • Slim-Line .180 male terminations at power end

66111 54" Long, Universal Triple-ID Jumper (31"x12"x12")
66932 60" Long, LED Triple-ID Jumper (36"x12"x12")

VMRS Code: 034-004-023 - 66111
034-004-042 - 66932

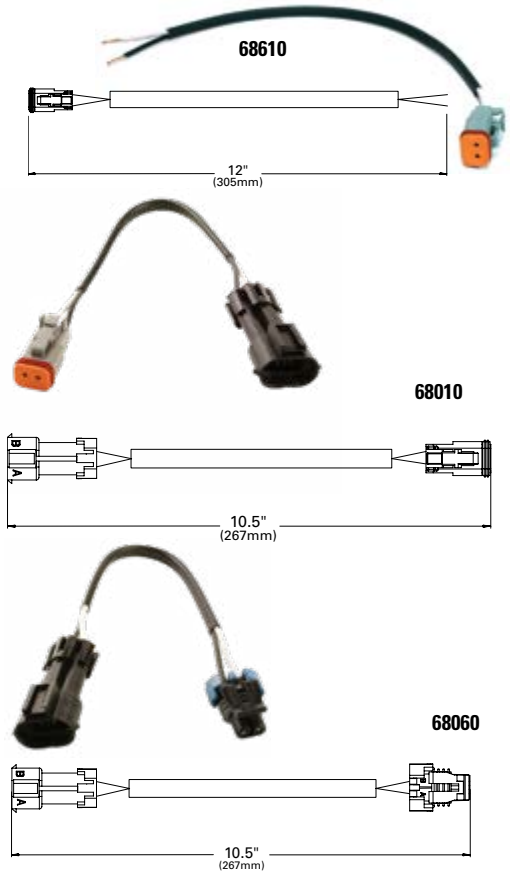

DEUTSCH® CONNECTOR

Mates with Trilliant® Work Lamps and competitive lamps using Deutsch® connectors

68010 Deutsch® to Packard®
68020 Packard® to Deutsch®
68030 Deutsch® to Packard® (Hard Shell SuperSeal)
68060 Packard® to Packard®
68610 12" Long, Blunt Cut Wires

VMRS Code: 034-002-031

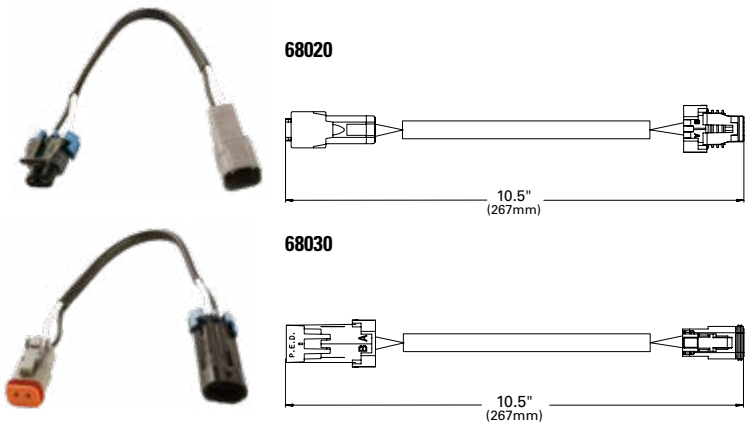

 © 2019 All Rights Reserved, Grote® Industries, Inc.

HARD SHELL SUPERSEAL CONNECTOR

Mates with Trilliant® Work Lamps and competitive lamps using AMP® superseal connectors

68580 9" Long, Blunt Cut Wires

VMRS Code: 034-004-042

68580

HARD SHELL CONNECTOR PIGTAILS

Mates with Grote® and competitive lamps using Hard Shell SuperSeal 1.5 series connectors

DUAL FUNCTION:

66861 11" Long, Chassis Ground, Blunt Cut Wires

SINGLE FUNCTION:

66862 11" Long, Chassis Ground, Blunt Cut Wires

VMRS Code: 034-002-031

66861

66862

PACKARD® CONNECTOR PIGTAIL

Sealed plug-in style pigtail for Grote® Hybrid Midturn / Marker LED lamp

66826 6" Long, Slim-Line .180 Males

VMRS Code: 034-002-031

66826

METRI-PACK® PLUG-IN SEALED PIGTAIL

Fits either 4- or 5-wire applications • Fits 5370-, 5371-, 5372- and 5376- series lamps

68680 20" Long, Sealed, Blunt Cut Wires

VMRS Code: 034-002-031

68680

TWO-LAMP 9" Y ADAPTER PIGTAILS

Accommodates 6-lamp systems • Molded termination avoids moisture and corrosion buildup • For use with 4" round and oval S/T/T lamps • Retrofits to superior Grote® male pin LED lamps without the need for new wiring

90° PLUG:

66814 9" Long, Adapter, Female-to-Male Pin

STRAIGHT:

66810 9" Long, Adapter, Female-to-Female Pin
66813 9" Long, Adapter, Male-to-Male Pin

VMRS Code: 034-002-031

66814

66810

66813

© 2019 All Rights Reserved, Grote® Industries, Inc.

MIDTURN ADAPTER PIGTAILS

Factory-molded plugs for use with ULTRA-BLUE-SEAL® trailer wiring system • For use with 4" round and oval S/T/T lamps • 6" midturn adapter harness • Dummy plug in brown female .180 receptacle

66820 Adapter, Female-to-Female Pin, (2) Additional Standard .180 Receptacles
66823 Adapter, Male-to-Male Pin, (2) Additional Standard .180 Receptacles

VMRS Code: 034-002-031

ADAPTER PLUGS

Includes female-to-male pin lamp termination, and male-to-female pin lamp termination • For use with 4" round and oval S/T/T lamps

66830 6" Long, Female Pin to Male Pin Lamp Termination
66831 6" Long, Male Pin to Female Pin Lamp Termination
66836 6" Long, Female Pin to 90° Male Pin Lamp Termination

VMRS Code: 034-002-031

ADAPTER PLUGS FOR HARD SHELL CONNECTORS

For use with 4" round and oval S/T/T lamps

COMPETITIVE HARNESS TO MALE PIN:

67006 6" Long, Hard Shell to Male Pin Connector

FEMALE PIN HARNESS TO AMP CONNECTOR:

66860 6" Long, Female Pin to Hard Shell Connector

VMRS Code: 034-002-031

COMBO PIGTAILS

For 4" integrated Back-up Lamp

4" WITH INTEGRATED BACK-UP

66863 Converter for Male Pin Lamps (10" Long)
66864 Converter for Female Pin Lamps (10" Long)
66865 Converter for Hard Shell Lamps (10" Long)
01-6686-E3 Ring Terminals to Lamp Termination

4" W/O INTEGRATED BACK-UP

66442 Converter for Male Pin Lamps, 10"
66443 Converter for Female Pin Lamps, 10"
66444 Converter for Hard Shell Lamps, 10"

VMRS Code: 034-002-031

 © 2019 All Rights Reserved, Grote® Industries, Inc.

REPLACEMENT LAMP SOCKET PIGTAILS

Ensures positive bulb contact in all types of weather • Exceeds all existing automotive requirements • Heavy gauge thermoplastic wire with brass contacts, terminals and flags

DOUBLE CONTACT:

68130 7 1/2" Long
68150 6 1/2" Long

SINGLE CONTACT:

68170 9 1/2" Long

VMRS Code: 034-004-023 - 68110
034-004-042 - 68130, 68150, 68080, 68170

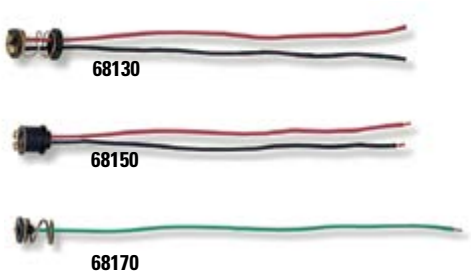

TWIST-IN SOCKET PIGTAIL

Includes 194 bulb • Fits 46002, 46003, 46913, 45662, 45712 and 45713 marker lamps

68380 9 1/2" Long, Socket, Blunt Cut Wires

Volts / Amp: 12V / .27A
VMRS Code: 034-004-042

Deutsch® is a registered trademark of TE Connectivity Corporation.; Packard® is a registered trademark of DELPHI TECHNOLOGIES, INC.; Metri-Pack® is a registered trademark of Aptiv Technologies Limited COMPANY BARBADOS;

All product and company names are trademarks™ or registered® trademarks of their respective holders. Use of them does not imply any affiliation with or endorsement by them.

NEED HELP FINDING THE RIGHT PRODUCT?

GROTE® CUSTOMER SERVICE IS JUST A PHONE CALL AWAY

800-628-0809

14

MOUNTING OPTIONS

OPTIONS DE FIXATION

OPCIONES DE MONTAJE

 © 2019 All Rights Reserved, Grote® Industries, Inc.

SPACER WIRE GUIDE

For use with LED Radius Light 64M11-5 or LED Fairing Light 64M21-5
- Designed for extended installation and wire routing
- Install with two #8 fasteners (not included)

49501-3 Spacer and Wire Guide - Bulk Pack

VMRS Code: 034-006-034

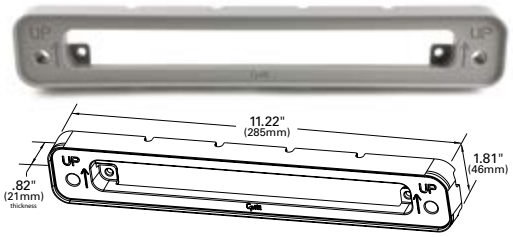

GASKET

To be used when surface mounting the LED Radius Light 64M11-5 or LED Fairing Light 64M21-5

49511-3 Gasket - Bulk Pack

VMRS Code: 034-001-122

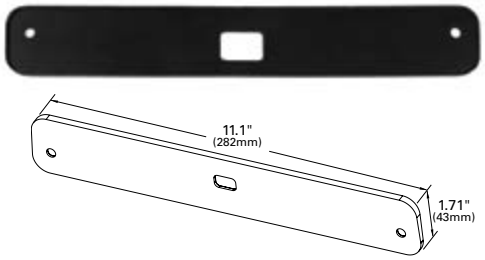

SNAP-IN COVER PLATES

Cover plate is held in place by snap tabs instead of screws for fast and easy installation • For use in retrofit of Grote S/T/T w/ integrated back-up lamps

94380-4 4" Round Gray, Pair Pack
94382-4 4" Round Black, Pair Pack
94390-4 6" Oval Gray, Pair Pack
94392-4 6" Oval Black, Pair Pack

Material: Polycarbonate
VMRS Code: 034-022-006

HOODED MICRONOVA® DOT GROMMET

Fits MicroNova® Dot lamps • For plate thickness to 1/4"

94360 Black

Material: PVC
Finish: Black
VMRS Code: 034-004-058

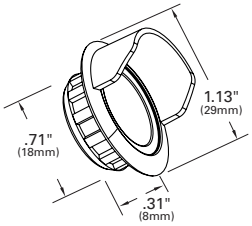

MICRONOVA® SECURITY PLATE

Installs over grommet-mounted MicroNova® Dot without impeding light output performance • Use stainless steel rivets (.119 rivet) or screws (not included) to mount directly to the vehicle • Not for use with 94360

42063 Stainless Steel

Material: Stainless Steel
Finish: Stainless Steel
VMRS Code: 034-004-036

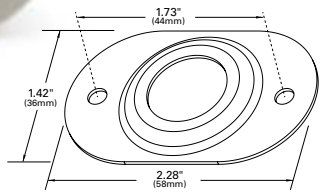

© 2019 All Rights Reserved, Grote® Industries, Inc.

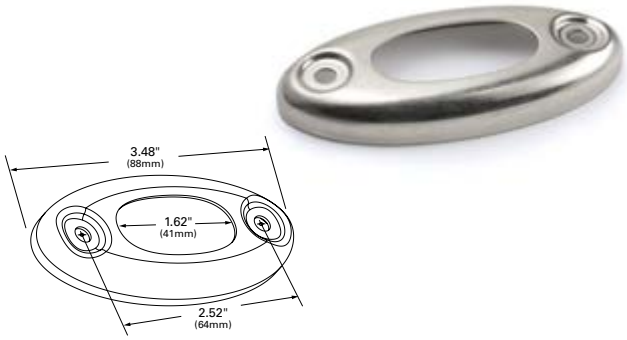

MICRONOVA® OVAL BEZEL

- Plate mounts directly to vehicle with stainless steel rivets or screws
- Provides an additional layer of theft deterrence
- Prevents lamp rotation when installed

42343 Stainless Steel Bezel

Material: Stainless Steel
Finish: Stainless Steel
VMRS Code: 034-004-043

RECESSED MOUNTING GROMMET FOR 2" ROUND LAMPS

Requires 2 5/16" mounting hole • Fits panel thickness up to 1/4"

92120 Open Grommet
92150 Closed Back Grommet

KITS:

94100 Open Grommet (92120 + 67050)

Material: PVC
Finish: Black
VMRS Code: 034-004-058 - 92120
034-004-027 - 92150

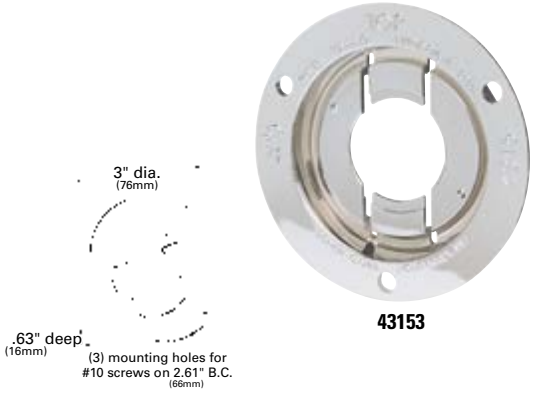

THEFT-RESISTANT MOUNTING FLANGE FOR 2" ROUND LAMPS

Patented twist-in locking system keeps lamp from backing out • Ideal for LED lighting • For use with 2" LED and incandescent lamps • Requires 2 1/4" mounting hole

43150 Gray, Polycarbonate
43152 Black, Polycarbonate
43153 Chrome-Plated, ABS

Material: Polycarbonate/ABS
Finish: Gray/Black/Chrome
VMRS Code: 034-004-036

SURFACE MOUNT BRACKET WITH GROMMET FOR 2" ROUND LAMPS

4 1/4" mounting screw hole spacing

93760 Gray

Material: Polycarbonate
Finish: Gray
Grommet: 92120
VMRS Code: 034-004-036

 © 2019 All Rights Reserved, Grote® Industries, Inc.

2" AND 2½" LICENSE LAMP MOUNTING BRACKET

Anti-glare shield eliminates stray light from distracting following motorists

43040 White

Material: Polycarbonate
Finish: White
VMRS Code: 034-004-036

RECESSED MOUNTING GROMMET FOR 2½" ROUND LAMPS

- Requires 2 25/32" hole • Fits panel thickness up to 1/8"

91400 Open Grommet
92070 Closed-Back Grommet

KITS:

94010 Open Grommet (91400 + 67050)

Material: PVC
Finish: Black
VMRS Code: 034-004-058

91400

RECESSED MOUNTING GROMMET FOR 2½" ROUND LAMPS

- Requires 3" hole • Fits panel thickness up to 1/4"

91410 Open Grommet

KITS:

94000 Open Grommet (91410 + 67050)

Material: PVC
Finish: Black
VMRS Code: 034-004-058

45° ANGLED BEVELED-EDGE RECESSED MOUNTING GROMMET FOR 2½" ROUND LAMPS

Fits 2 3/4" hole • Open back fits panel thickness up to 3/16", closed back fits up to 3/8"

91880 Open Grommet
92920 Closed-Back Grommet

Material: PVC
Finish: Black
VMRS Code: 034-004-058

91880

© 2019 All Rights Reserved, Grote® Industries, Inc.

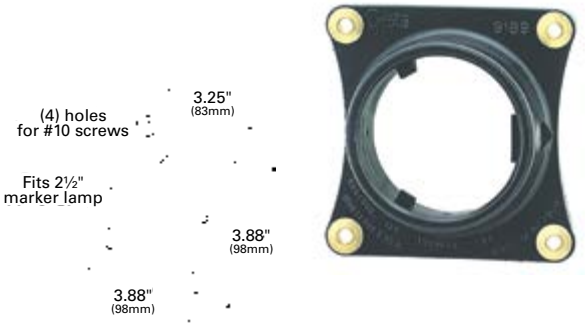

SURFACE MOUNT GROMMET FOR 2½" ROUND LAMPS

Protective brass eyelets for mounting screw

91890 Open Grommet

Material: PVC
Finish: Black
VMRS Code: 034-004-058

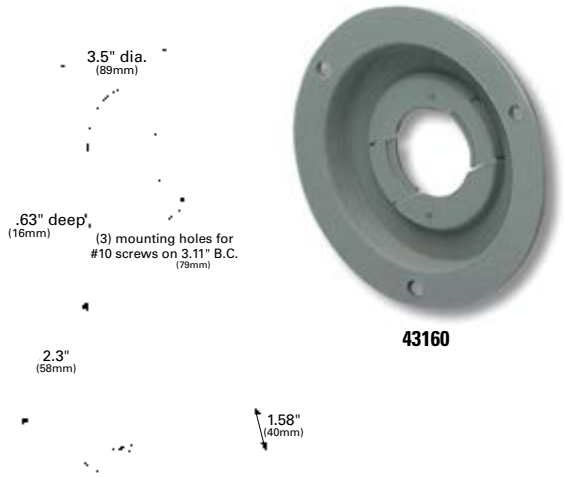

43160

THEFT-RESISTANT MOUNTING FLANGE FOR 2½" ROUND LAMPS

Patented twist-in locking system keeps lamp from backing out • Ideal for LED lighting • Fits 2 1/2" LED and incandescent lamps • Requires 2.8" mounting hole

MOUNTING FLANGE:

43160 Gray, Polycarbonate
43162 Black, Polycarbonate
43163 Chrome-Plated, ABS

PIGTAIL RETENTION CAP:

93670 Gray

Material: Polycarbonate/ABS
Finish: Gray/Black/Chrome
VMRS Code: 034-004-036

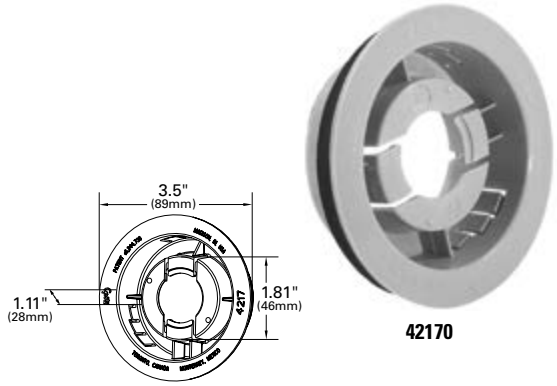

42170

SNAP-IN MOUNTING FLANGE FOR 2 ½" ROUND LAMPS

Flange is held into place by snap tabs for a quicker, easier installation • Snap tabs on the flange lock the flange into place, keeping it from backing out of the hole • Foam gasket allows for mounting in materials from 1/8" to 1/4" thick • Requires 2 25/32" mounting hole

MOUNTING FLANGE:

42170 Gray

SECURITY RING:

43823 Stainless Steel

Material: Polycarbonate/Stainless Steel
Finish: Gray/Chrome
VMRS Code: 034-004-036

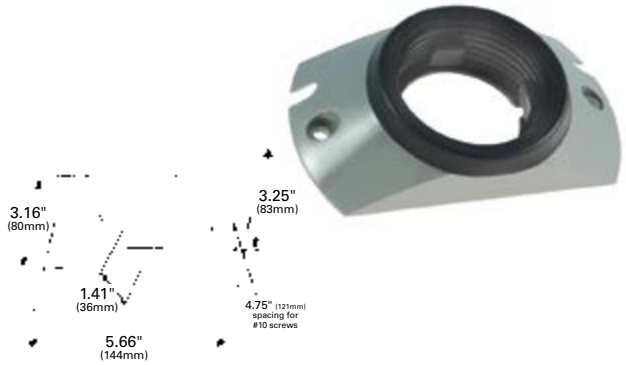

SURFACE MOUNTING BRACKET WITH GROMMET FOR 2½" ROUND LAMPS

• Includes grommet 91400 • 4 3/4" mounting screw hole spacing

93750 Gray

Material: Polycarbonate/PVC
Finish: Gray/Black
VMRS Code: 034-004-036

 © 2019 All Rights Reserved, Grote® Industries, Inc.

TWIST-IN SURFACE MOUNT BRACKET FOR 2" AND 2½" ROUND LAMPS

4" mounting screw hole spacing

43690 Gray

Material: Polycarbonate
Finish: Gray
VMRS Code: 034-004-036

TWIST-IN SURFACE MOUNT BRACKET FOR 2" AND 2½" ROUND LAMPS

3" mounting screw hole spacing • Supports the use of PC-rated lamps for greater visibility

42180 Gray

Material: Polycarbonate
Finish: Gray
VMRS Code: 034-004-036

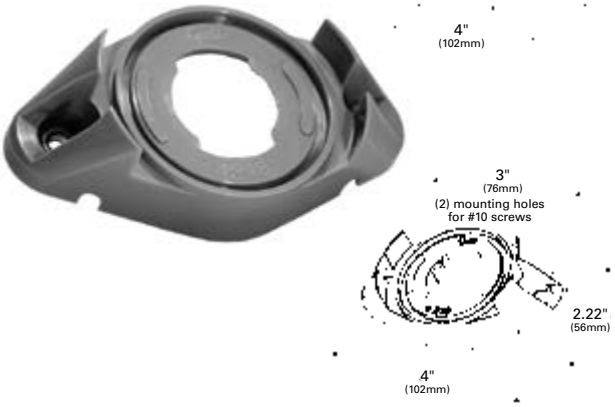

4 5/8" CORNER RADIUS SURFACE MOUNT BRACKET FOR 2" AND 2½" ROUND LAMPS

Fits 4 5/8" corner radius • Use with PC-rated lights

43760 Gray

Material: Polycarbonate
Finish: Gray
VMRS Code: 034-004-036

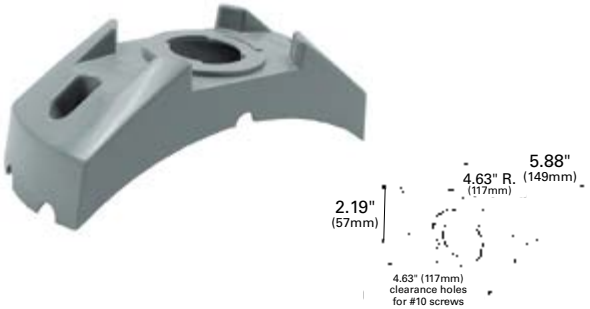

90º ANGLE MOUNTING BRACKET FOR 2" AND 2½" ROUND LAMPS

Baked black enamel finish • Grommet required for mounting • 2 1/4" mounting screw hole spacing

FOR 2 1/2" LAMPS:

43512 Accommodates 94010, 91400, 92070 Grommets (2 25/32" Hole)
43522 Accommodates 94000, 91410 Grommets (3" Hole)

FOR 2" LAMPS:

43532 Accommodates 94100, 92120, and 92150 Grommets (2 5/16" Hole)

Material: Steel
Finish: Black Enamel
VMRS Code: 034-004-036

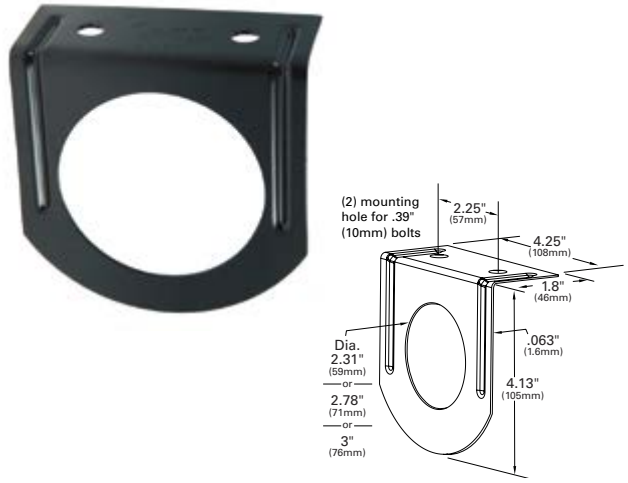

© 2019 All Rights Reserved, Grote® Industries, Inc.

GROMMET FOR SMALL RECTANGULAR LAMPS

Requires 1 1/2" x 2 7/8" hole (with 3/8" radius corners) • Fits panel thickness up to .2"

91380 Black

Material: PVC
Finish: Black
VMRS Code: 034-002-002

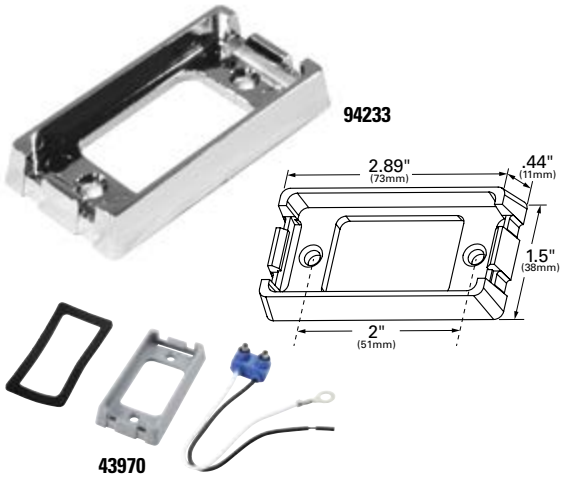

BRACKET FOR SMALL RECTANGULAR LAMPS

2" mounting screw hole spacing • Kits include pigtail and mounting pad

94233 Chrome-Plated

KITS:

43970 Gray (+ 67050 pigtail)
43980 Chrome-Plated (+ 67050 pigtail)

Material: Polycarbonate/ABS
Finish: Chrome/Gray
VMRS Code: 034-002-002 - 94233
034-004-036 - 43970, 43980

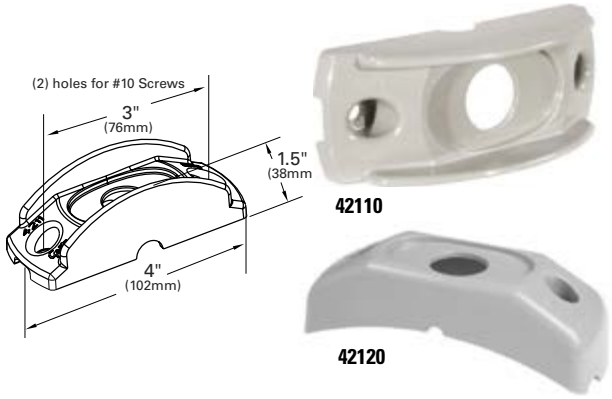

SURFACE MOUNT BRACKET FOR MICRONOVA® OR MICRONOVA DOT

Armored design to protect the lamp from damage • 3" mounting screw hole spacing (2 3/4" spacing for radius bracket)

42110 Gray
42120 Gray, Corner Radius Bracket

Material: Polycarbonate
Finish: Gray
VMRS Code: 034-004-036 - 42110

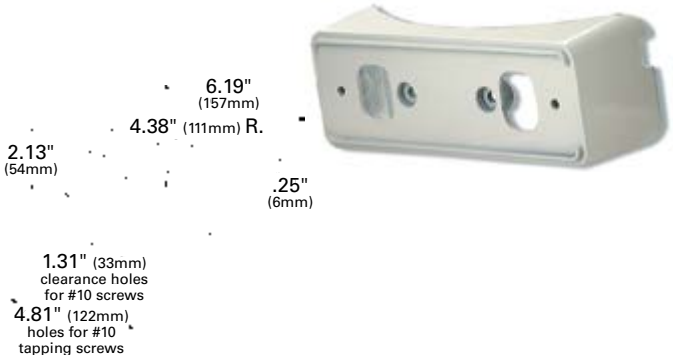

4¾" CORNER RADIUS BRACKET

For use with PC-rated lights • 4 13/16" mounting screw hole spacing • works with Turtleback® II style lamps

43050 Gray

Material: Polycarbonate
Finish: Gray
VMRS Code: 034-004-036

 © 2019 All Rights Reserved, Grote® Industries, Inc.

HEADER-MOUNT BRACKET FOR SMALL RECTANGULAR LAMPS

Mountable at 45° angle for PC applications • Narrow rail applications
• 3 39/64" mounting screw hole spacing • Kit includes single-seal pigtail

KITS:

43380 White (42141 + 67050)

Material: Polycarbonate
Finish: White
VMRS Code: 034-004-036

GROMMET FOR SMALL RECTANGULAR LAMPS

Requires 2 1/2" x 3 1/2" hole (with 17/32" corners) • Fits panel thickness up to 3/16"

93400 White
93402 Black

Material: PVC
Finish: Black/White
VMRS Code: 034-004-058

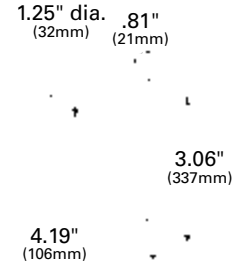

MICRONOVA® LAMP BEZEL

Corrosion resistant, chrome-plated • Snap-fit mounting

93803 Chrome-plated

Material: ABS
Finish: Chrome
VMRS Code: 034-004-036

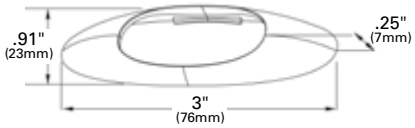

LICENSE LAMP BRACKET FOR SMALL RECTANGULAR LAMPS

Anti-glare shield eliminates stray light from distracting following motorists
• 3" mounting screw hole spacing • Snap-in lamp installation

42162 Black

Material: Polycarbonate
Finish: Black
VMRS Code: 034-004-036

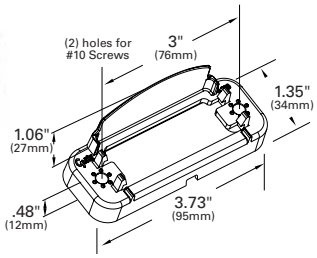

LICENSE LAMP MOUNTING BRACKET

Features snap-in lamp installation • Fits license lamp 60671, 60261, 60601
Anti-glare shield eliminates stray light from distracting following motorists
• 2" mounting screw hole spacing

43960 Gray
43962 Black

Material: Polycarbonate
Finish: Gray/Black
VMRS Code: 034-004-036

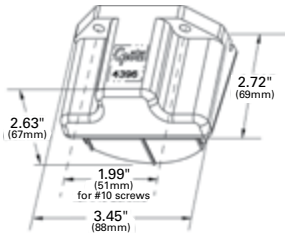

© 2019 All Rights Reserved, Grote® Industries, Inc.

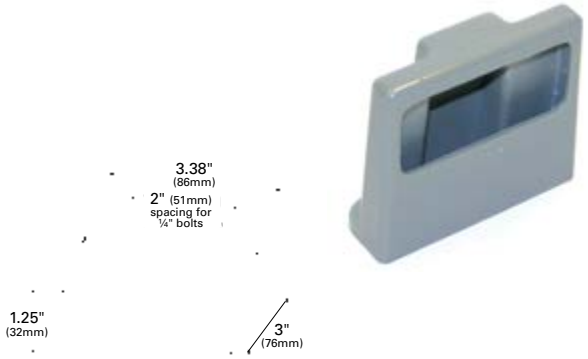

LICENSE LAMP MOUNTING BRACKET

Fits license lamp 60261 • 2" mounting screw hole spacing • Thin design reduces mounting space requirements

43830 Gray

Material: Polycarbonate
Finish: Gray
Grommet: 92520
VMRS Code: 034-004-036

MICRONOVA® DOT ROUND ADAPTER BRACKETS

Assembles directly into 2" and 2.5" PVC grommets • Replaces any incandescent or LED 2" or 2.5" round clearance/marker • Flanges torque to a maximum of 25 in-lbs and mount with three #10 pan or round head screws into existing hole patterns of 2" and 2.5" flanges

42302 2" Round Grommet Adapter
42312 2.5" Round Grommet Adapter
42292 3" Round Flange Adapter
42282 3.5" Round Flange Adapter

VMRS Code: 034-004-036

MICRONOVA® SURFACE MOUNT BRACKET

4 13/16" mounting hole separation provides easy retrofit
• Great for narrow surface mounting applications

42070 Gray

Material: Polycarbonate
Finish: Gray
VMRS Code: 034-004-037

 © 2019 All Rights Reserved, Grote® Industries, Inc.

MICRONOVA® DOT ADAPTER BRACKET

Allows the MicroNova® DOT to mount directly to the vehicle using this bracket or snap-fit into compatible 4378-series mounting brackets
- 2 1/2" - 3" mounting screw hole spacing

94350 Gray

Material: Polycarbonate
Finish: Gray
VMRS Code: 034-004-036

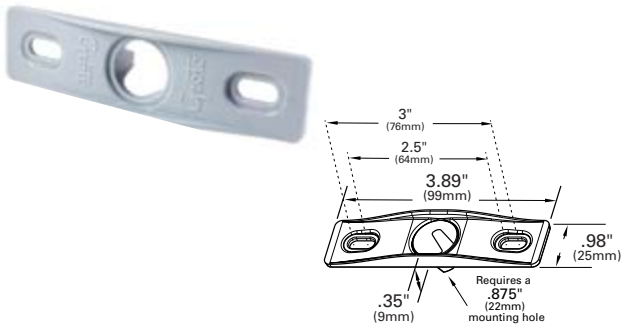

MOUNTING BRACKET FOR LARGE RECTANGULAR LAMPS

- 3" mounting screw hole spacing
- Kits include unique connector design with plug-in pigtail

43780 Gray Bracket
43783 Chrome-Plated Bracket, ABS

KITS:

43390 Gray (43780 + 66981)
43790 Gray (43780 + 66980)

Material: Polycarbonate/ABS
Finish: Gray/Chrome
VMRS Code: 034-004-036

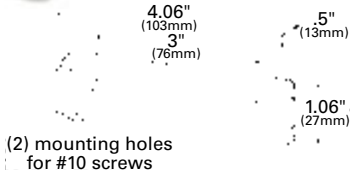

LOW-PROFILE MOUNTING BRACKET

Integrated plug connection • Legal mount for combination clearance/marker lamp when mounted on a 45° angle (PC) • 3" mounting screw hole spacing

43850 Gray

Material: Polycarbonate
Finish: Gray
VMRS Code: 034-004-036

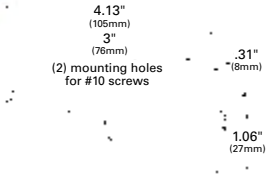

M1 SERIES LAMP BEZEL

For use with M1 style cab markers

93453 Chrome

Material: ABS
Finish: Chrome
VMRS Code: 034-004-036

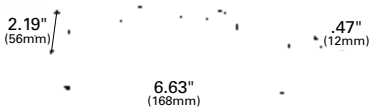

SMALL CAB MARKER BEZEL

Can be installed while lamps are mounted

92583 Bezel

Material: ABS
Finish: Chrome
VMRS Code: 034-004-036

© 2019 All Rights Reserved, Grote® Industries, Inc.

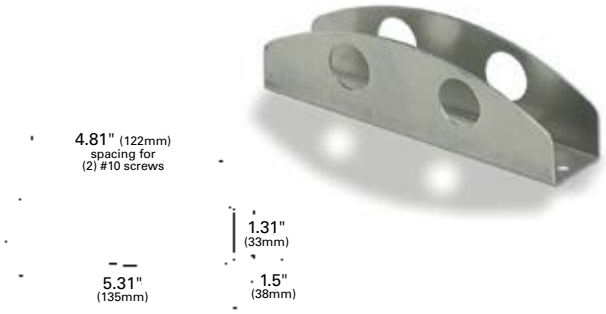

THIN-LINE LED LAMP GUARD

Cutaway to accept plug-in pigtail • For use with 4690,4692, and 4693 series lamps

43074 Aluminum

Material: Aluminum
Finish: Aluminum
VMRS Code: 034-004-130

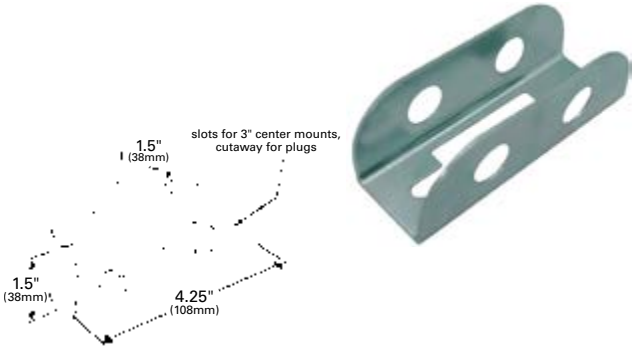

LAMP GUARD FOR SMALL RECTANGULAR LAMPS

Cutaway to accept plug-in pigtail

43120 Aluminum

Material: Aluminum
Finish: Aluminum
VMRS Code: 034-004-036

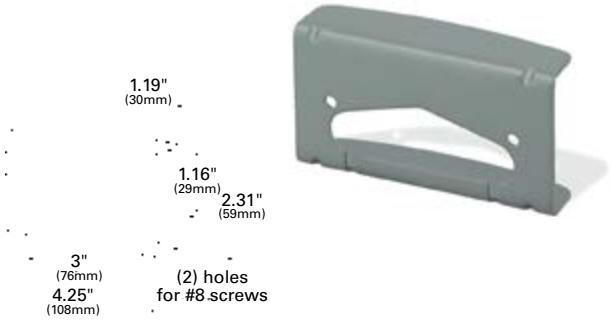

STEEL LAMP GUARD

For use with 2" x 4" oval and square corner surface mount clearance/marker lamps • 3" mounting screw hole spacing

43144 Steel

Material: Steel
Finish: Silver
VMRS Code: 034-004-130

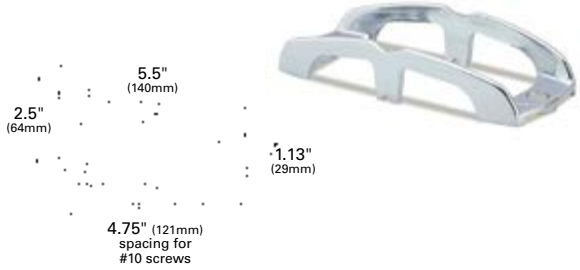

CHROME BUTTRESS-STYLE LAMP GUARD

For use with 2" x 4" oval and square corner surface mounted lamps
• 4 3/4" mounting screw hole spacing

43673 Chrome-Plated

Material: ABS
Finish: Chrome
VMRS Code: 034-004-130

RECESSED MOUNTING GROMMET FOR 4" ROUND LAMPS

Requires 4 1/2" mounting hole • Fits panel thickness up to 1/4"

91740 Grommet

Material: PVC
Finish: Black
VMRS Code: 034-002-002 - 91740

 © 2019 All Rights Reserved, Grote® Industries, Inc.

CLOSED BACK RECESSED MOUNTING GROMMET FOR 4" ROUND LAMPS

For open installations where splash plate is not used • Requires a 4 1/2" mounting hole • Fits panel thickness up to 1/4"

91950 Grommet

Material: PVC
Finish: Black
VMRS Code: 034-002-002

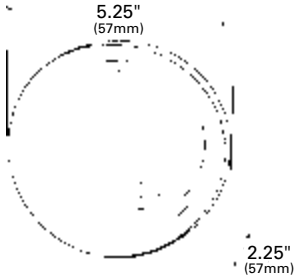

STAINLESS STEEL SNAP-IN THEFT-RESISTANT MOUNTING FLANGE FOR 4" ROUND LED LAMPS

Foam gasket allows for mounting in materials from 1/8" to 1/4" thick • Requires 4 1/2" mounting hole • No drilling necessary to install

93683 Stainless Steel

Material: Stainless Steel
Finish: Stainless Steel
VMRS Code: 034-002-006

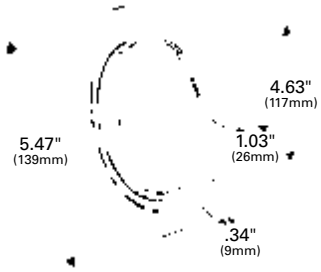

SNAP-IN THEFT-RESISTANT MOUNTING FLANGE FOR 4" ROUND LED LAMPS

Fits panel thickness 1/8" to 1/4" • Requires 4 1/2" mounting hole

93552 Black
93553 Chrome-Plated

Material: ABS
Finish: Black/Chrome
VMRS Code: 034-002-006

93553

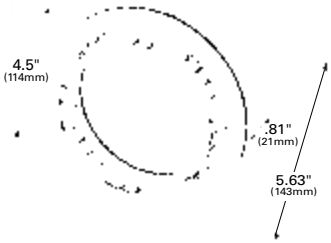

THEFT-RESISTANT MOUNTING FLANGE FOR 4" ROUND LAMPS

For use with 4" round LED and incandescent lamps • Mounting hole size 4 1/2" diameter

92510 White, Polycarbonate
92512 Black, Polycarbonate
92513 Chrome-Plated, ABS
92511 Gray, Polycarbonate
43253 Stainless Steel

SECURITY RING

43343 Stainless Steel Security Ring (must be used with flange)

Material: Polycarbonate; Stainless Steel; ABS
Finish: White; Gray; Black; Chrome; Stainless Steel
VMRS Code: 034-002-006

43253

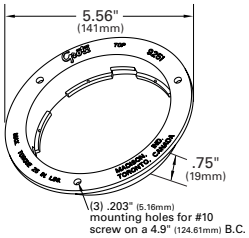

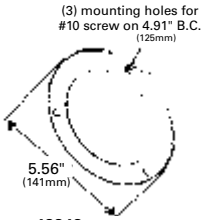

43343

© 2019 All Rights Reserved, Grote® Industries, Inc.

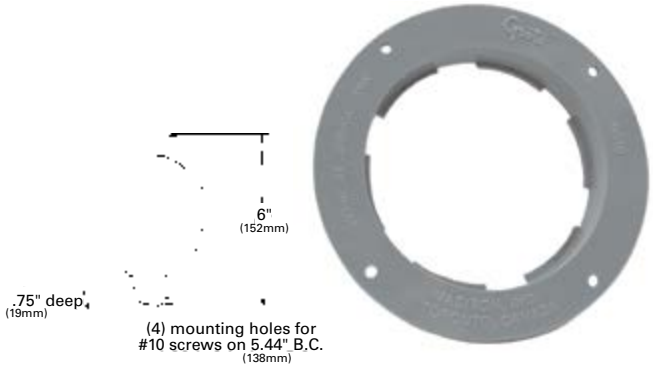

THEFT-RESISTANT BETTS LIGHTING MOUNTING ADAPTER

Allows users to retrofit their Betts brand lighting to Grote® mounting dimensions • Retrofits to Grote® 4" round sealed lamps and LEDs • Requires 4 1/2" diameter mounting hole

93190 Gray

Material: Polycarbonate
Finish: Gray
VMRS Code: 034-002-006

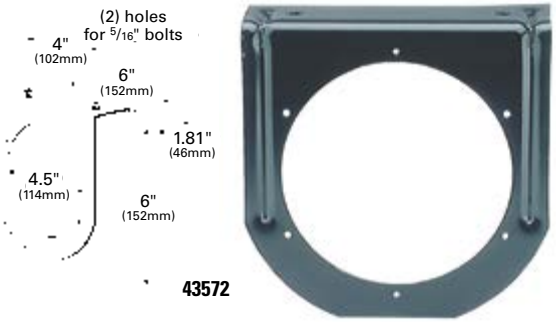

ANGLED MOUNTING BRACKET FOR 4" ROUND LAMPS

Accepts lamp equipped with a grommet or flange • 4" mounting screw hole spacing

43572 Black, 90° angle bracket

Material: Steel
Finish: Black Powder-Coated
Grommet: 91740
VMRS Code: 034-002-006

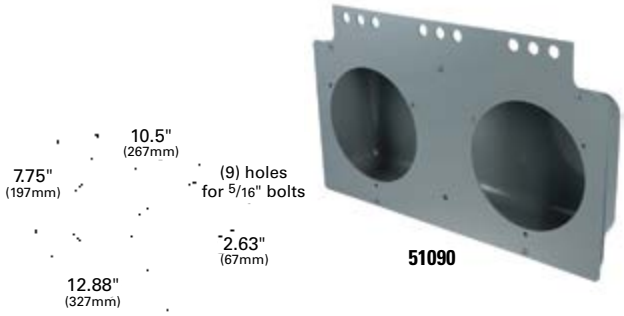

MOUNTING MODULE FOR 4" ROUND LAMPS

Closed back, rear lamp module for lamps requiring 4 1/2" mounting hole opening • Accepts lamps equipped with a grommet or flange

43655 Yellow Zinc
51090 Gray

Material: Steel
Finish: Yellow Zinc/Gray Powder-Coated
VMRS Code: 034-002-006 - 43655
078-002-004 - 51090

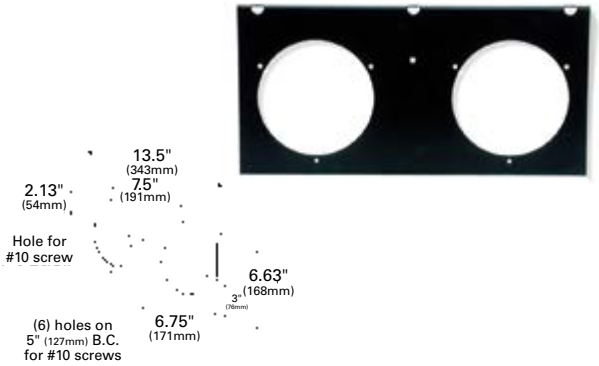

2-LAMP MOUNTING MODULE FOR 4" ROUND LAMPS

Two 4 1/2" mounting holes to hold standard recessed lamps or grommet-mounted 4" round lamps • Accepts lamps equipped with a grommet or flange • #10 mounting screw hole in center accepts 2 1/2" round reflector

43642 Black, Powder-Coated

Material: Steel
Finish: Black
VMRS Code: 034-002-006

 © 2019 All Rights Reserved, Grote® Industries, Inc.

MOUNTING MODULE FOR 4" ROUND LAMPS

Black enamel-coated steel construction • Use with 4" LED strobes or any 4" round lamp • Accepts lamp equipped with a grommet or flange • Weld to your chassis or apparatus

43732 Black

Material: Steel
Finish: Black
VMRS Code: 034-001-051

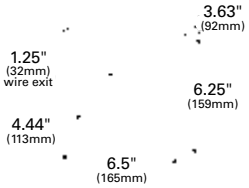

O-RING

94110 O-Ring for use with 46782 and 46783 lamps

VMRS Code: 031-004-124

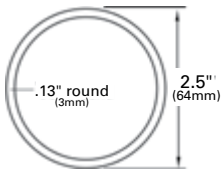

SNAP RING

99593 Use with 50222 and 50352
99595 Use with 50232

Material: Stainless Steel
Finish: Stainless Steel
VMRS Code: 034-002-005

RECESSED MOUNTING GROMMET FOR 6" OVAL LAMPS

Fits 2 1/2" x 6 3/4" oval mounting hole • Fits panel thickness up to 1/4"

92420 Open Grommet
92720 Closed Back Grommet

Material: PVC
Finish: Black
VMRS Code: 034-002-002

92420

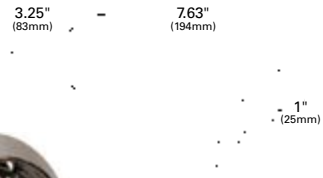

SURFACE MOUNT SNAP-IN BRACKET FOR 6" OVAL LAMPS

Allows for quick and easy surface mount application • Designed to work with 5413-, 5414-, 5416-, 5417-product lines only. • 6" mounting screw hole spacing

42152 Black, Polycarbonate
42153 Chrome, ABS

Material: Polycarbonate/ABS
Finish: Black/Chrome
VMRS Code: 034-004-036

42153

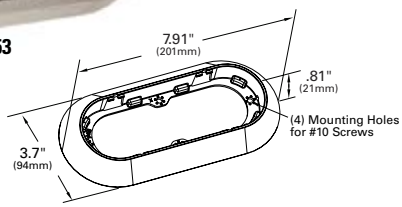

© 2019 All Rights Reserved, Grote® Industries, Inc.

SURFACE MOUNT BRACKET FOR 6" OVAL LAMPS

Can be used with any Grote® 6"oval LED or incandescent lamp • Ideal for adding LED strobe lamps to a vehicle • 7 5/16" mounting screw hole spacing

43172 Black

Material: Polycarbonate
Finish: Black
VMRS Code: 034-002-006

THEFT-RESISTANT MOUNTING FLANGE FOR 6" OVAL LAMPS

For use with most LED and incandescent lamps • Security ring fits over oval theft-resistant mounting flanges • 7 1/4" x 3" mounting screw hole spacing

42103 Stainless Steel, Security Ring
43220 Gray, Polycarbonate
43222 Black, Polycarbonate
43223 Chrome-Plated, ABS
43723 Stainless Steel

Material: Polycarbonate/Stainless Steel/ABS
Finish: Gray/Black/Stainless Steel/Chrome
VMRS Code: 034-002-006

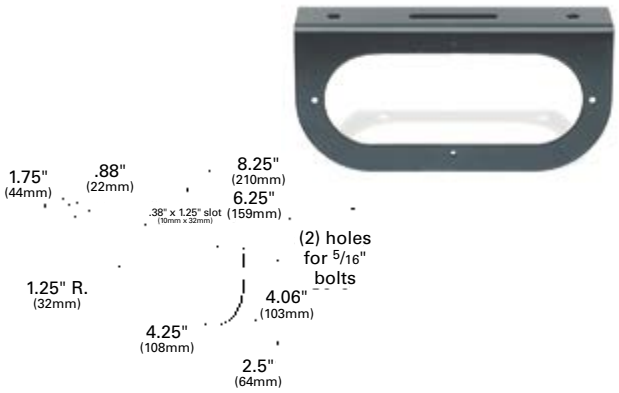

ANGLED MOUNTING BRACKET FOR 6" OVAL LAMPS

Accepts lamp equipped with a grommet or flange • 6 1/4" mounting screw hole spacing

43362 Black, 90° angle bracket

Material: Steel
Finish: Black
Grommet: 92420
VMRS Code: 034-002-006

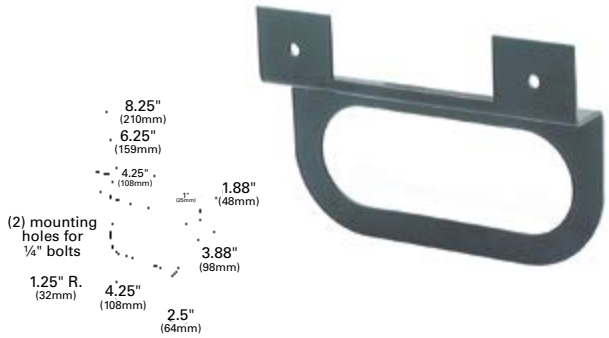

"Z" MOUNTING BRACKET FOR 6" OVAL LAMPS

Heavy-gauge steel, baked black enamel finish • Accepts lamp equipped with a grommet or flange • 6 1/4" mounting screw hole spacing

43952 Black

Material: Steel
Finish: Black
Grommet: 92420
VMRS Code: 034-002-006

 © 2019 All Rights Reserved, Grote® Industries, Inc.

MOUNTING BRACKET FOR 6" OVAL LAMPS AND STROBES

Accepts lamp equipped with a grommet or flange • 8 1/4" mounting screw hole spacing • Weld to your chassis or apparatus

43100 Black

Material: Steel
Finish: Black
Grommet: 92420
VMRS Code: 034-001-051

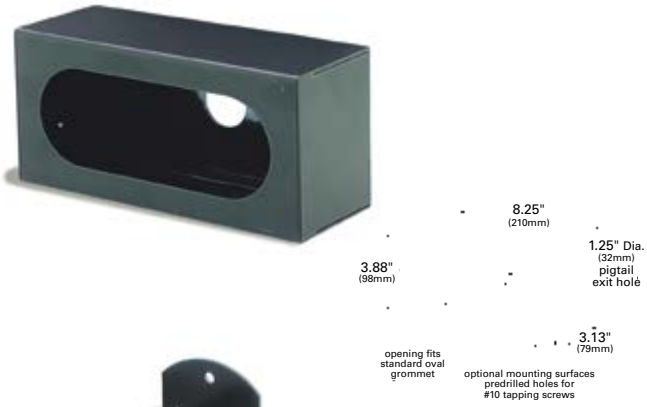

MOUNTING BRACKET FOR 7" ROUND LAMPS

Heavy-gauge steel • For use with 7800, 7830 and 7831 series lamps

43282 Black, Powder-Coated

Material: Steel
Finish: Black
VMRS Code: 034-003-080

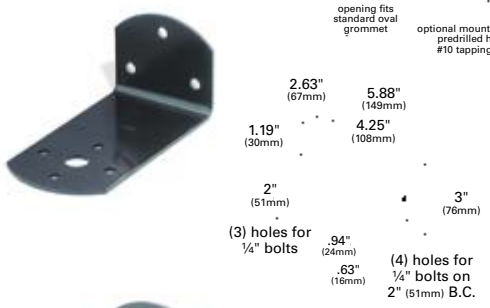

MOUNTING BRACKET FOR UTILITY LAMPS

Detachable angle mounting bracket for utility work lamps with standard 3/8" mounting

43292 Black, Powder-Coated

Material: Steel
Finish: Black
VMRS Code: 034-003-080

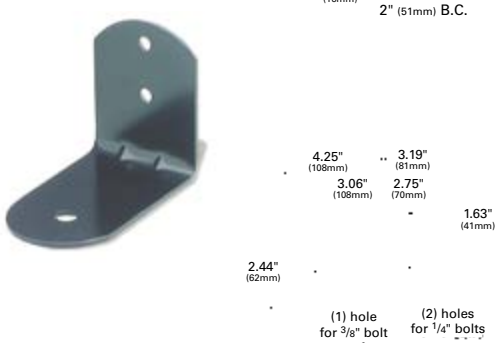

RECESSED MOUNTING GROMMET FOR RECTANGULAR LAMPS

Requires 5 7/16" x 3 9/16" mounting hole with 1" radius corners
• Fits panel thicknesses up to 5/16"

94180 Mounting Grommet

Material: PVC
Finish: Black
VMRS Code: 034-002-002

90º ANGLE BRACKET FOR 7" ROUND LAMPS

Provides multiple mounting options for flush mount 7" round lamps

93982 Black, Powder-Coated

Material: Steel
Finish: Black
VMRS Code: 034-001-022

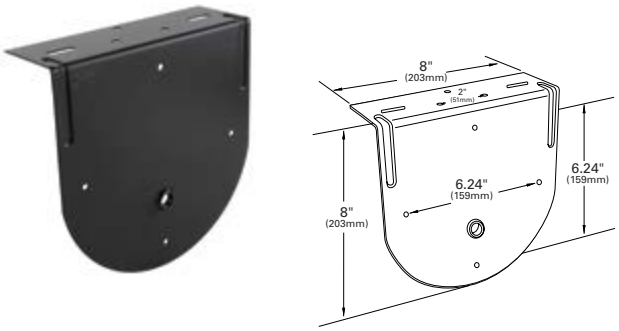

© 2019 All Rights Reserved, Grote® Industries, Inc.

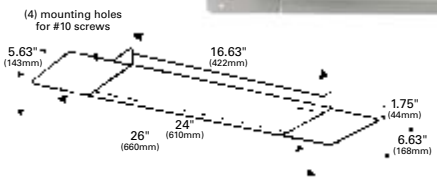

RECESSED FLUORESCENT LAMP PAN

Provides a rigid mounting surface for fluorescent lamps • Fits Grote's fluorescent lamp 61511 • Keeps insulation away from lamp

43540 Recessed Pan

Material: Aluminum
Finish: Polished
VMRS Code: 034-004-036

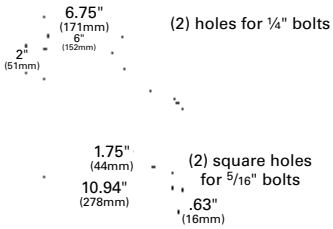

43325

SLOW-MOVING VEHICLE EMBLEM BRACKETRY

Easy installation • Use with slow-moving vehicle emblem 71152 (emblem not included)

EMBLEM BRACKET:

43325 Steel

Material: Steel
Finish: Galvanized
VMRS Code: 034-001-051

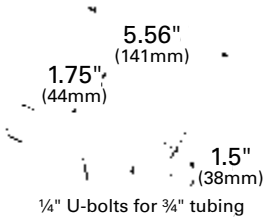

STROBE AND BEACON MOUNTING ADAPTER FOR MIRROR BRACKET ASSEMBLY

Allows for mounting of strobe and beacon warning lamps to mirror bracket assembly

PIPE MOUNT:

93600 Aluminum/Steel Bracket w/ 1" Built-in Mount

Material: Aluminum/Steel
Finish: Gray
VMRS Code: 034-001-051

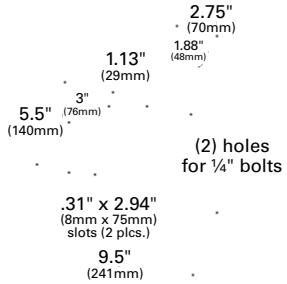

UNIVERSAL OFFSET LICENSE PLATE BRACKET

For use with most standard two-stud box-style lamps and license plates

43262-5 Black RETAIL

Material: Polypropylene
Finish: Black
VMRS Code: 034-004-036

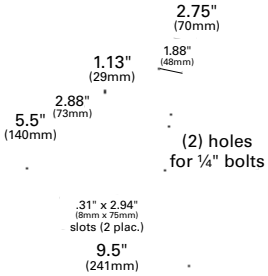

UNIVERSAL STEEL OFFSET LICENSE PLATE BRACKET

For use with most standard two-stud box-style lamps and license plates

43022 Black, Powder-Coated
43022-5 Black, Powder-Coated RETAIL

Material: Steel
Finish: Black
VMRS Code: 034-004-036

 © 2019 All Rights Reserved, Grote® Industries, Inc.

UNIVERSAL STEEL LICENSE PLATE BRACKET

For use with most standard two-stud box-style lamps and license plates

43272 Black, Powder-Coated
43272-5 Black, Powder-Coated RETAIL

Material: Steel
Finish: Black
VMRS Code: 034-004-036

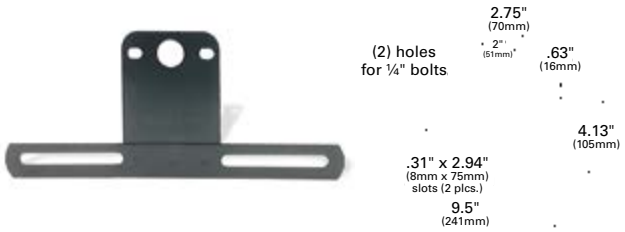

UNIVERSAL STEEL LICENSE PLATE BRACKET

For use with most standard two- or three-stud box-style lamps and license plates

43842 Black, Powder-Coated

Material: Steel
Finish: Black
VMRS Code: 034-004-036

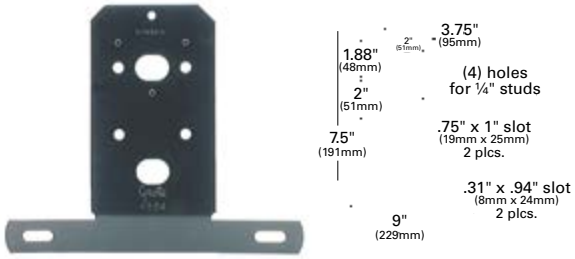

ADJUSTABLE BRACKET FOR TRILLIANT® LAMPS

Adjustable and lockable bracket for the Trilliant® LED Whitelight lamps • Provides more aiming control and more reliability than the standard bracket • Cantilever locking mechanism stays in place in even the harshest environments

43652 Bracket, Black

Material: Zinc
Finish: Black
VMRS Code: 034-006-034

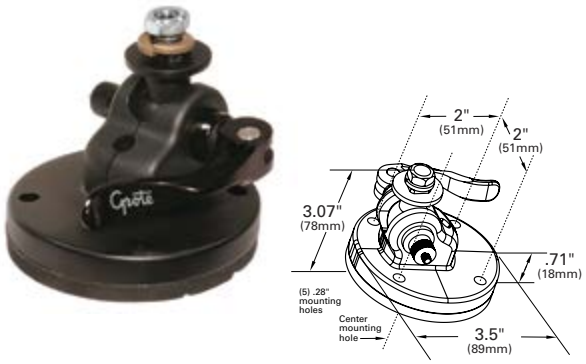

WORK LIGHT MOUNTING BRACKET

- Designed to work with most Trilliant® and Brite Zone® work lights
- Allows work lamps to pivot without damage to vehicle
- Robust construction to withstand multiple hours of vibration
- Mount direct to vehicle with M6 fasteners

94450 Steel Mounting Bracket

Material: 16 GA Steel
VMRS Code: 034-006-034

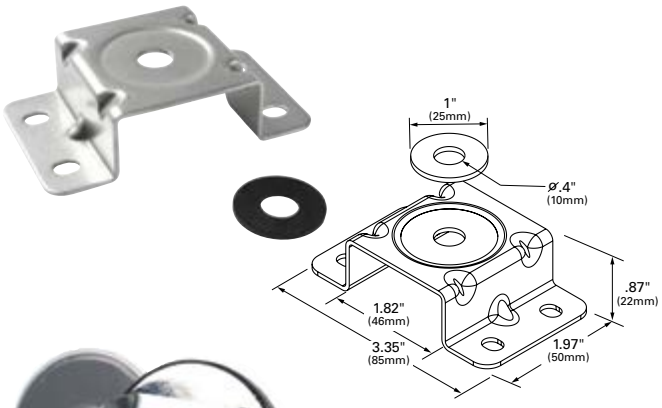

REPLACEMENT MAGNETIC MOUNT

Can be used as a magnetic mount on Par 36 rubber tractor and utility lamps • Has adhesive magnet pad to prevent scratching of vehicle • 80 lb. pull magnet

43300 Magnetic Mount

Material: Steel
Finish: Chrome
VMRS Code: 034-001-051

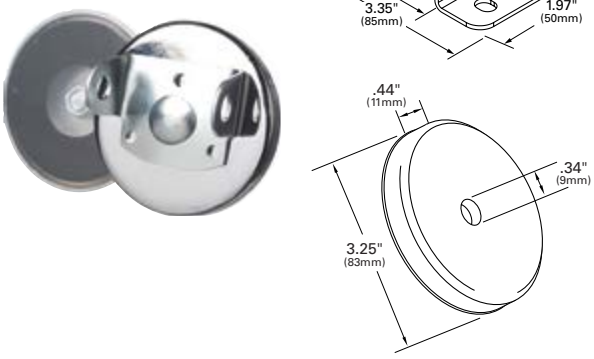

© 2019 All Rights Reserved, Grote® Industries, Inc.

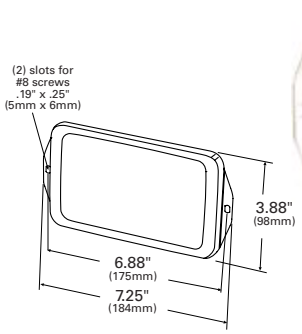

FLUSH-MOUNT WORK LAMP BRACKET

Add-on bracket to convert the Trilliant® Mini LED Work Lamp into a flush-mount lamp

94690 Stainless Steel

Material: Stainless Steel
Finish: Stainless Steel
VMRS Code: 034-002-002

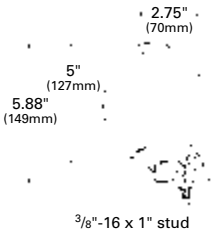

PAR 36 RUBBER TRACTOR HOUSING

Shock-absorbing, weather-proof body • Swivel mount

64930 Black

Material: Rubber
Finish: Black
VMRS Code: 034-001-015

AGRICULTURE LIGHT ADAPTER BRACKET KIT

Fits Surface-mount LED amber warning & red stop/tail/turn lamps
• Surface-mount lamps can be connected as a dual-lamp with use of the adapter bracket

98130 Agriculture Light Adapter Bracket Kit

VMRS Code: 034-004-044

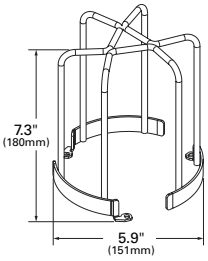

WARNING & HAZARD 6" BRANCH GUARD

Fits Products: 78051, 78053, 78055, 78061, 78063, 78065, 78081, 78085, 78050, 78052, 78054, 78080

98460 6" Branch Guard

Material: Steel w/ Black Powder Coat
VMRS Code: 034-004-153

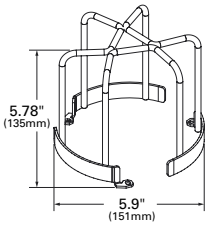

WARNING & HAZARD 4" BRANCH GUARD

Fits Products: 78031, 78033, 78035, 78071, 78075, 78851, 78070, 78030, 78034, 78851, 78853, 78855

98470 4" Branch Guard

VMRS Code: 034-004-153

 © 2019 All Rights Reserved, Grote® Industries, Inc.

WARNING & HAZARD 6" OVAL BEZEL

Fits Products: 78190, 78191, 78193, 78194, 78195

98410 6" Oval Black Bezel
98480 6" Oval Chrome Bezel

Material: ABS
VMRS Code: 034-001-051

98480 98410

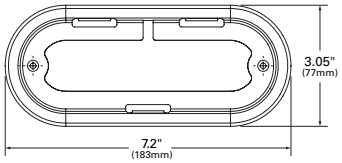

WARNING & HAZARD DIRECTIONAL WARNING BRACKETS AND BEZELS

Fits Products: 78140, 78141, 78142, 78143, 78144, 78145, 78146, 78460, 79080, 79100, 79110, 79120

BRACKET

98350 License Bracket, Aluminum
98360 L Bracket, Steel

BEZEL

98390 Directional Chrome Bezel
98400 Directional White Bezel

Material: 98390 - ABS, 98400 - Polycarbonate
VMRS Code: 034-001-051

98350

98360

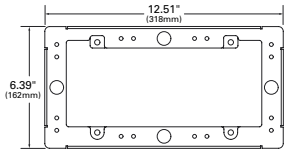

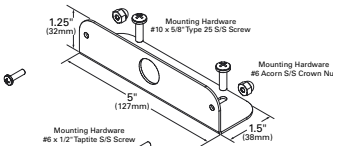

98400

98390

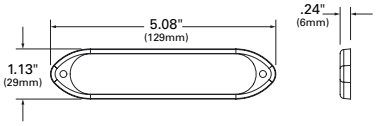

© 2019 All Rights Reserved, Grote® Industries, Inc.

15

REFLECTORS

RÉFLECTEURS

REFLECTANTES

 © 2019 All Rights Reserved, Grote® Industries, Inc.

CONSPICUITY TAPE

Exceeds DOT requirements • Durable, impact and solvent resistant • Easy installation • Reflects light even in daytime • Bright prismatic appearance

ALTERNATING 7" SILVER/11" RED:

40650 2" x 150' Roll, 10-year Warranty
40650-5 2" x 18" (5) Strips RETAIL
41160 2" x 150' Roll, 5-year Warranty
41080 1.5" x 150' Roll, 10-year Warranty

ALTERNATING 6" SILVER/6" RED:

41050 2" x 150' Roll, 10-year Warranty

SILVER:

40641 2" x 150' Roll, 10-year Warranty
40641-5 2" x 12" (4) Strips, Poly Bag, 10-year Warranty RETAIL

SCHOOL BUS APPLICATION:

41133 Yellow, 2" x 150' Roll, 10-year Warranty

WHITE:

40701 2" x 150' Roll, 10-year Warranty

Regulations / Standards: FMVSS 108 / DOT-C2 (40641, 40650, 40650-5, 41050, 41160)
VMRS Code: 053-004-005

REFLECTIVE STRIPS

Sealed optics • Adhesive-backed or screw-on mounting versions • 7 1/4" mounting screw hole spacing

12" STRIPS:

41122 Red
41121 Silver

Material: ABS/Acrylic
Regulations / Standards: FMVSS 108 / DOT-C
VMRS Code: 053-004-005

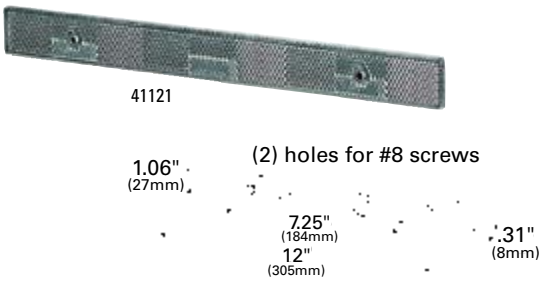

STICK-ON TAPE REFLECTORS

Adheres permanently to flat or curved surfaces • Exceeds DOT and SAE "A" reflex requirements • Durable, impact resistant

1 11/16" X 4 1/4" RECTANGULAR REFLECTOR:

41152 Red, 5-year Warranty
41153 Yellow, 5-year Warranty

2 15/16" ROUND REFLECTOR:

41142 Red, 5-year Warranty
41143 Yellow, 5-year Warranty

Regulations / Standards: FMVSS 108 / SAE A
VMRS Code: 053-004-036 - 41152, 41142
053-004-035 - 41153, 41143

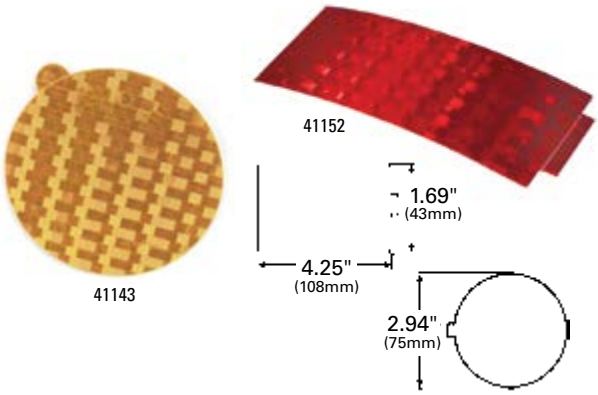

© 2019 All Rights Reserved, Grote® Industries, Inc.

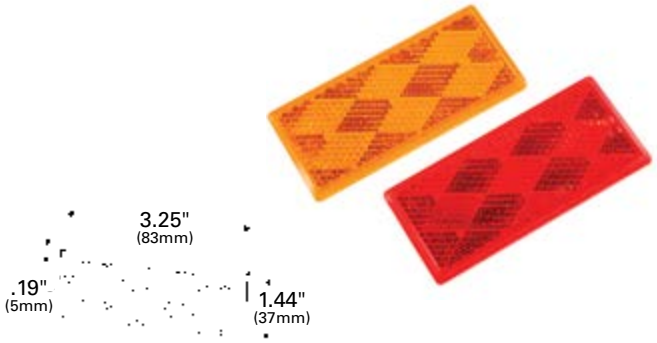

STICK-ON RECTANGULAR REFLECTORS

Adhesive backing protects prisms against dirt • Fits narrow rails and tight spaces • Firm-stick backing for instant bond and lasting adhesion

40302 Red
40303 Yellow

Material: Acrylic
Regulations / Standards: FMVSS 108 / SAE A
VMRS Code: 053-004-036 - 40302
053-004-035 - 40303

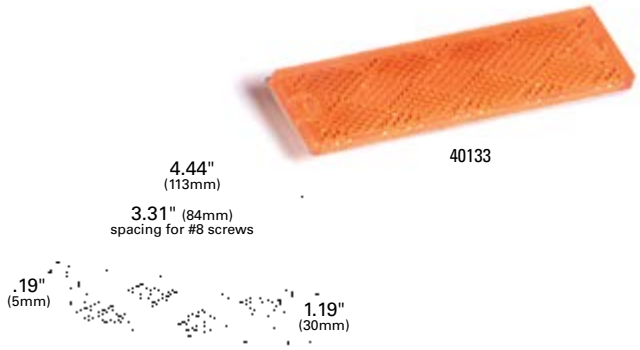

MINI STICK-ON RECTANGULAR REFLECTORS

Fits narrow rails and tight spaces • Mountable with two #8 screws (optional) • 3 15/16" mounting screw hole spacing • Firm-stick backing for instant bond and lasting adhesion

STICK-ON/SCREW MOUNTABLE:

40132 Red
40132-5 Red, Pair Pack RETAIL
40133 Yellow
40133-5 Yellow, Pair Pack RETAIL

Material: Acrylic
Regulations / Standards: FMVSS 108 / SAE A
VMRS Code: 053-004-036 - 40132, 40132-5
053-004-035 - 40133, 40133-5

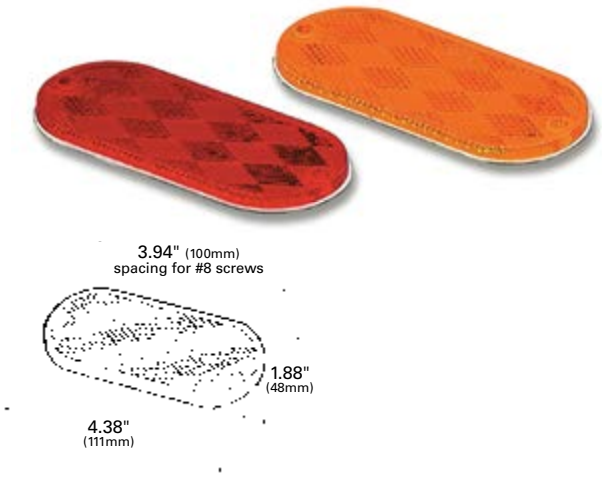

OVAL REFLECTOR

Firm-stick backing for instant bond and lasting adhesion • Mountable with two #8 screws (optional) • 3 15/16" mounting screw hole spacing

SCREW MOUNTABLE:

41042 Red
41043 Yellow

STICK-ON/SCREW MOUNTABLE:

41032 Red
41033 Yellow

Material: Acrylic
Regulations / Standards: FMVSS 108 / SAE A
VMRS Code: 053-004-036 - 41042, 41032
053-004-035 - 41043, 41033

 © 2019 All Rights Reserved, Grote® Industries, Inc.

ROUND STICK-ON REFLECTOR

Adhesive backing protects prisms against dirt • Firm-stick backing for instant bond and lasting adhesion

3" REFLECTOR:

40052 Red
40052-5 Red RETAIL
40053 Yellow

2" REFLECTOR:

41002 Red
41003 Yellow

Material: Acrylic
Regulations / Standards: FMVSS 108 / SAE A
VMRS Code: 053-004-036 - 40052, 40052-5, 41002
053-004-035 - 40053, 41003

40052

40053

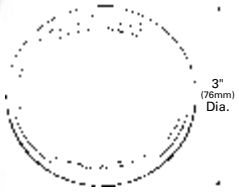

SEALED 3" ROUND STICK-ON REFLECTOR

Hermetically sealed • Firm-stick backing for instant bond and lasting adhesion

40062 Red
40063 Yellow

Material: Acrylic
Regulations / Standards: FMVSS 108 / SAE A
VMRS Code: 053-004-036 - 40062
053-004-035 - 40063

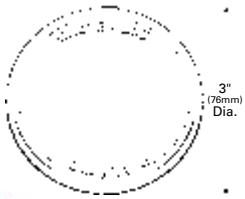

2½" ROUND STICK-ON REFLECTOR

Adhesive backing protects prisms against dirt • Firm-stick backing for instant bond and lasting adhesion

40072 Red
40072-5 Red, Pair Pack RETAIL
40073 Yellow
40073-5 Yellow, Pair Pack RETAIL

Material: Acrylic
Regulations / Standards: FMVSS 108 / SAE A
VMRS Code: 053-004-036 - 40072, 40072-5
053-004-035 - 40073, 40073-5

40072

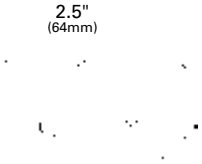

© 2019 All Rights Reserved, Grote® Industries, Inc.

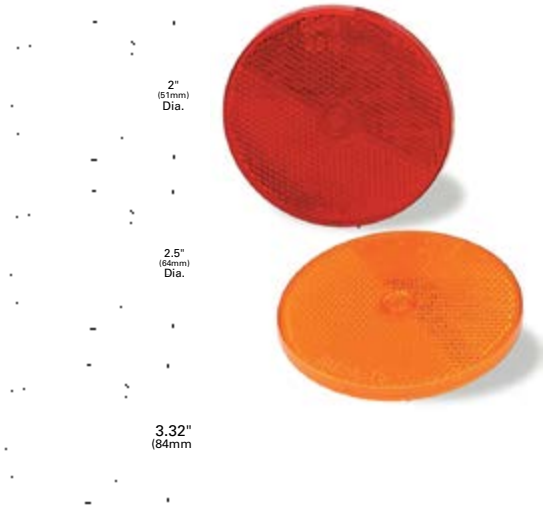

SEALED CENTER-MOUNT REFLECTOR

Hermetically sealed • Simple installation with single #10 screw

2" ROUND:

41012 Red
41013 Yellow

2½" ROUND:

40092 Red
40093 Yellow

3½" ROUND:

40152 Red
40153 Yellow

Material: Acrylic
Regulations / Standards: FMVSS 108 / SAE A
VMRS Code: 053-004-036 - 41012, 40092, 40152
053-004-035 - 41043, 40093, 40153

ALUMINUM TWO-HOLE MOUNTING REFLECTOR

Lens gasket cushions lens and protects prisms against dirt • Lightweight housing • Low profile • 3 15/16" mounting screw hole spacing

40232 Red
40232-5 Red RETAIL
40233 Yellow
40233-5 Yellow RETAIL

Material: Aluminum/Acrylic
Regulations / Standards: FMVSS 108 / SAE A
VMRS Code: 053-004-036 - 40232, 40232-5
053-004-035 - 40233, 40233-5

STEEL TWO-HOLE MOUNTING REFLECTOR

Extra-deep lens recess for protection • Lens gasket cushions lens and protects prisms against dirt • Baked-steel finish • 3 15/16" mounting screw hole spacing

40192 Red, Silver Housing with Gasket
40193 Yellow, Silver Housing with Gasket

Material: Steel/Acrylic
Regulations / Standards: FMVSS 108 / SAE A
VMRS Code: 053-004-036 - 40192, 82562
053-004-035 - 40193

 © 2019 All Rights Reserved, Grote® Industries, Inc.

SIGN-UP FOR GROTE'S ENHANCED G24/7 VISIT ORDERS.GROTE.COM

Grote® Industries is pleased to announce the launch of the enhanced G24/7 system. This complimentary service is an innovative way to place orders, track order status and view all your Grote® product activity. From the convenience of your computer or mobile device, you can now access previously unavailable information that will help you more successfully manage your business and inventory.

ORDERS.GROTE.COM

NEW FEATURES

- ***PAY ANY INVOICE ONLINE ANY TIME***
- ***EASY CREDIT CARD PROCESSING***
- ***NOW MOBILE FRIENDLY***
- ***REPRINT PACKING LISTS AND INVOICES***

UPLOAD FROM MICROSOFT® EXCEL
Customers can also upload items from Microsoft® Excel to create orders.

REFER AND REORDER USING "MY LIST"
The user can create a list of products for future reference or to reorder.

E-MAIL NOTIFICATION
When a new order is created and when an order is shipped, unlimited recipients can receive an instant e-mail notification.

ORDER ENTRY ONLINE BY CUSTOMER PART NUMBER

USING G24/7, YOU CAN QUICKLY AND EASILY:

- Track the status of current orders
- Check the status of backorders
- Check for substitutions or replacements for obsolete parts
- Check Grote® inventory availability
- Confirm ship dates
- Link to shipping carrier
- View invoice information
- Track credits
- View weight & packaging information
- View previously placed orders
- View product technical information
- Reprint packing lists and invoices

© 2019 All Rights Reserved, Grote® Industries, Inc.

16

MISCELLANEOUS

AUTRES

MISCELÁNEA

WWW.GROTE.COM | © 2019 All Rights Reserved, Grote® Industries, Inc.

VINYL PERMIT HOLDER

Laminated for all-weather protection • Sealing zipper for easy insertion of paper

43411 Vinyl

Material: Vinyl/Aluminum
Finish: Green/Aluminum
VMRS Code: 053-005-007

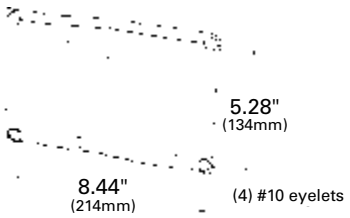

ALUMINUM PERMIT HOLDER

Heavy-formed, rustproof housing • Includes vinyl pouch
• 6 3/8" mounting screw hole spacing

43424 Aluminum

Material: Aluminum w/ Vinyl Pouch
Accessory: Vinyl Pouch: 43441
VMRS Code: 053-005-007

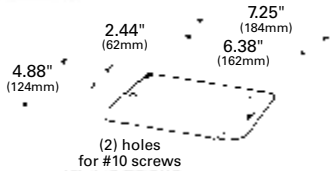

DOCUMENT HOLDER

Rugged construction • Chemical-resistant, Ray-Ban® colored lens now has a darker tint • Comes with document protector polybag • Two mounting options for flexibility • Can be installed using pop-rivets

43901 Gray

Material: Polycarbonate
Finish: Gray/Smoke
Lens: Smoke 93351
VMRS Code: 053-005-007

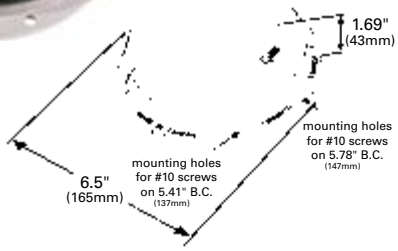

ELECTRICAL SEALANT

Special dielectric silicone compound seals out moisture, salt and corrosives
• Protects plug-ins and other electrical fittings

99580 1 1/4 Oz. Tube

VMRS Code: 053-999-096

© 2019 All Rights Reserved, Grote® Industries, Inc.

99170

99180

99170-1

ULTRA-SEAL CORROSION-PREVENTIVE SEALANT

Cost-effective product prevents rust and corrosion • Good mechanical stability • Added tackifiers improve adhesion and resistance to washout
- Has a 25% higher non-conductivity rating compared to the competition
- Operating range -40°F to 302°F

99170 4 oz. (118 ml.) Tube
99180 8 oz. (236 ml.) Tub
99170-GT 14 oz. (414 ml.) Tub

RETAIL DISPLAY:

99170-1 Display (12 of 99170) RETAIL

VMRS Code: 053-999-096

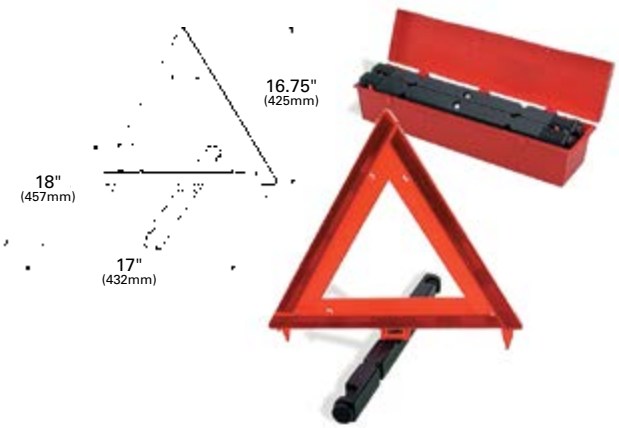

TRIANGLE WARNING KIT

Reflective up to 1/2 mile • Exceeds legal requirements • Weatherproof and impact-resistant • Weighted for stability • Kit of three triangle devices in carrying case

KITS:

71422 Three Triangles

Material: Acrylic/ABS/Polypropylene
Regulations / Standards: FMVSS 125 / SAE J774C™-Type I
VMRS Code: 053-004-005

 © 2019 All Rights Reserved, Grote® Industries, Inc.

SLOW-MOVING VEHICLE EMBLEM

13 3/4" yellow-orange center for daytime warning • Outer 1 5/8" red reflex border for nighttime warning • 6" mounting screw hole spacing

71152 Orange & Red

Material: Acrylic/ABS
Standards: SAE J943A™, ASAE S276.3
Bracket: 43325, 43335
VMRS Code: 053-004-005

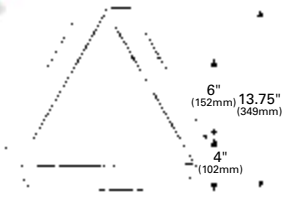

TRAFFIC CONE

High visibility for traffic control • Fade-resistant, bright orange finish is molded of PVC to eliminate cracking and peeling

71440 Small Cone
71450 Large Cone

Material: PVC
Finish: Bright Orange
VMRS Code: 053-004-005

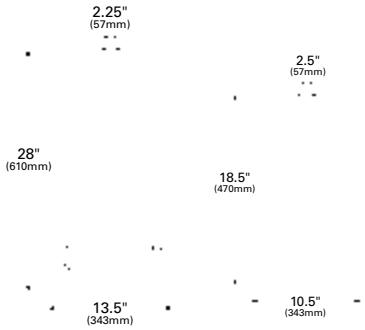

Ray-Ban® is a registered trademark of Luxottica Group S.P.A.

All product and company names are trademarks™ or registered® trademarks of their respective holders. Use of them does not imply any affiliation with or endorsement by them.

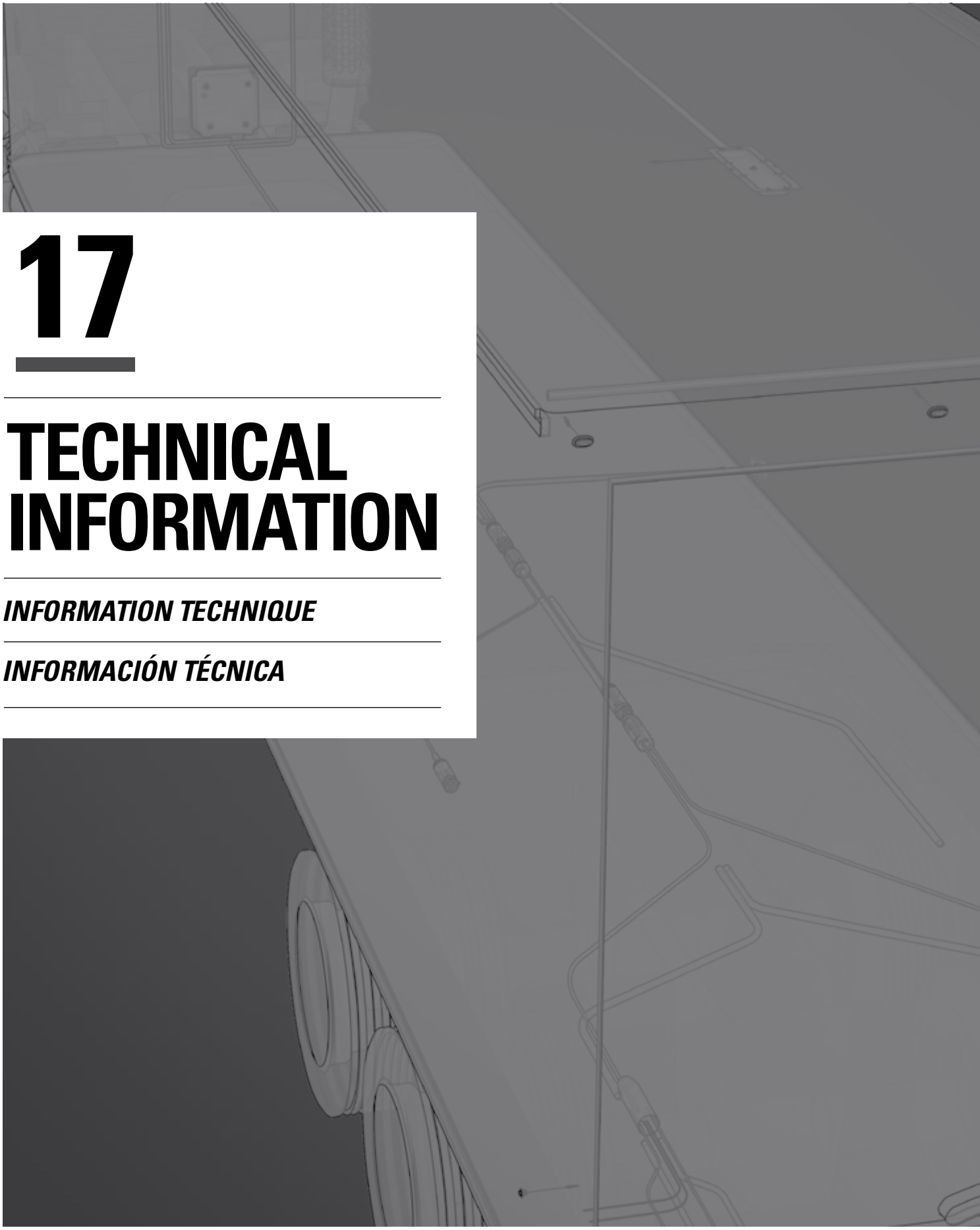

17

TECHNICAL INFORMATION

INFORMATION TECHNIQUE

INFORMACIÓN TÉCNICA

 © 2019 All Rights Reserved, Grote® Industries, Inc.

LIMITED WARRANTY

Grote® Industries, Inc. ("Grote®") warrants its products to be free from defects in material and workmanship under normal use and service as set forth in this Limited Warranty. THIS LIMITED WARRANTY is the final, complete and exclusive expression of warranty to the purchaser and cannot be modified except in writing signed by an authorized officer of Grote®.

GENERAL ONE-YEAR LIMITED WARRANTY

Subject to the following conditions, Grote® warrants to the original purchaser only (and not to anyone else) of each new product made by Grote® that any part thereof which proves to be defective in material or workmanship within one year from the date of manufacture by Grote® will, at Grote's option, be repaired or replaced without charge upon return to Grote® of the defective product, provided any defect in the product is brought to the attention of Grote® within the warranty period, who alone will be authorized to furnish or arrange for repairs or replacements within the terms of this limited warranty.

The above limited warranty does not apply, and no warranty, either expressed or implied, shall be applicable (a) to damage resulting from accident, alteration, misuse or abuse; (b) if the product is not installed, operated and maintained according to procedures recommended by Grote®; (c) if the serial number, date code, or other identifying marks affixed to the product by Grote® are removed, obliterated or defaced. In no case shall the warranty be extended to defects in materials, components (which includes but not limited to bulbs), or services furnished by third parties, nor to the installation of the product performed by third parties, except those performed by or on behalf of Grote® authorized distributors. If any repairs are made, or any other parts are replaced during the warranty period, by any distributor other than a Grote® distributor, in accordance with service manuals, parts, accessories, or attachments other than authorized by Grote® for use in Grote's products, the purchaser shall pay for such repairs or parts without recourse against Grote®, and Grote® shall be relieved of responsibility for fulfillment of the warranty with respect to parts or components of all repairs, alterations, or replacements so made.

INSTALLATION GUIDELINES

Grote® Systems - Grote® lamp assemblies and harness products are designed to function as a complete system; therefore, this limited warranty shall not extend to failure of any Grote® products caused by the use of incompatible lamp assemblies, harness products or other components.

Heat - All electronic and lighting products produce heat. The installer is responsible for assurance that the application of the component will not result in contact with flammable material.

Surface Mount - The following procedures need to be practiced to assure proper installation: The lamp should be placed on a level unobstructed surface. Number 10 screws should be tightened to 25 in. pounds of torque. Only Grote® ULTRA-BLUE-SEAL® pigtails should interface with any Grote® lamps. These guidelines will assure the products will function and last as they were designed. Deviations from these guidelines will void any warranty.

Design Voltage and Current - Current is provided as an approximate value and is listed for the design voltage of the lamp. The design voltage of the lamp may vary. Customers should contact Grote® Industries if detailed information is required.

IN CONSIDERATION OF THE EXPRESS WARRANTY AND OTHER TERMS HEREIN CONTAINED, THE PURCHASER AGREES THAT PURCHASER'S EXCLUSIVE REMEDY AND GROTE'S SOLE LIABILITY ON ANY CLAIM, WHETHER IN TORT, CONTRACT OR WARRANTY, SHALL BE LIMITED TO, AT GROTE'S OPTION, REPAIR OR REPLACEMENT OF A DEFECTIVE PRODUCT. NO OTHER REMEDY (INCLUDING BUT NOT LIMITED TO INCIDENTAL OR CONSEQUENTIAL DAMAGES FOR THE LOST PROFITS, LOST SALES, INJURY TO PERSON OR PROPERTY: OR ANY OTHER INCIDENTAL LOSS OR DAMAGES) SHALL BE AVAILABLE TO PURCHASER. IN NO EVENT, AND FOR NO CAUSE WHATSOEVER, INCLUDING ANY BREACH OR DEFAULT BY GROTE®, SHALL GROTE® HAVE ANY MONETARY LIABILITY TO PURCHASER IN EXCESS OF THE PRICE PAID BY PURCHASER FOR THE PRODUCT IN QUESTION.

THIS LIMITED WARRANTY IS EXPRESSLY IN LIEU OF ALL OTHER EXPRESSED OR IMPLIED WARRANTIES, INCLUDING THE IMPLIED WARRANTY OF MERCHANTABILITY AND THE IMPLIED WARRANTY OF FITNESS FOR A PARTICULAR PURPOSE, AND OF ALL OTHER OBLIGATIONS OR LIABILITIES ON THE PART OF GROTE®. NO DEALER, DISTRIBUTOR OR OTHER REPRESENTATIVE OF THE COMPANY IS AUTHORIZED TO CHANGE THIS WARRANTY IN ANY WAY OR TO GRANT ANY OTHER WARRANTY.

Any affirmation of fact or promise made by Grote® shall not be deemed to create an expressed warranty that the products shall conform to the affirmation or promise. Any description of the product is for the sole purpose of identifying such product and shall not be deemed to create an express warranty that the product shall conform to the description. Any sample or product model is for illustrative purposes only and shall not be deemed to create an express warranty that the whole of the products shall conform to the sample or model. Further, no affirmation or promise, or description, sample or model shall be deemed a part of the basis of the bargain between Grote® and the purchaser.

Grote® assumes no responsibility that title conveyed to the purchaser is good or the transfer of title to the products is rightful, or that the products shall be delivered free from any security interest or other lien or encumbrance of any third party, or free from any rightful claim of any third party by way of infringement or otherwise.

NON-TRANSFERABLE

THIS WARRANTY SHALL EXTEND ONLY TO THE ORIGINAL PURCHASER AND IS NON-TRANSFERABLE.

EXCEPTIONS

The general one-year (1) limited warranty shall apply but shall be altered as set forth below for the following products:

(1) All Grote® Sealed Lamps (12 Volt Only) shall be subject to a two-year (2) limited warranty unless otherwise stated.

A) Grote® Economy sealed lamps shall be subject to a one-year (1) limited warranty.

(2) Conspicuity Tape shall be subject to a five-year (5) or ten-year (10) limited warranty. Please refer to the Grote® reference guide and/or Grote® website for warranty time frame by part number.

(3) Grote® LED Products are subject to the terms set forth below under "Special LED Limited Warranty."

(4) Grote® ULTRA-BLUE-SEAL® Male Pin Wire Harnesses shall be subject to a seven-year (7) limited warranty.

(5) Grote® ULTRA-BLUE-SEAL® Female Pin (Standard) Harnesses shall be subject to a five-year (5) limited warranty.

(6) Grote® makes no warranty whatsoever with respect to bulbs and fluorescent tubes in lamp assemblies.

(7) Grote® makes no warranty whatsoever with respect to any and all devices powered by common household-type batteries.

© 2019 All Rights Reserved, Grote® Industries, Inc.

SPECIAL LED LIMITED WARRANTY

Grote® LED lamps are covered by the Grote® Special LED Limited Warranty and are warranted to be free from defects in workmanship and/or material only for the specified time frames listed below. Grote® will replace any Grote® LED lamp to the original purchaser, if the Grote® LED lamp fails due to defects in workmanship and/or materials during the warranty time frame specified below:

THE LED LIMITED WARRANTY DOES NOT APPLY TO SEVERE APPLICATIONS. Examples: Mining, Snow plowing and Fertilizers.

(1) Grote® LED lamps are to REMAIN INTACT, FREE FROM PHYSICAL ABUSE, SUBJECT TO PROPER INSTALLATION WITHOUT MODIFICATION AND MUST BE USED ONLY WITH GROTE® APPROVED WIRING ACCESSORIES. ANY VIOLATION OF THESE CONDITIONS WILL VOID THIS LED LIMITED LAMP WARRANTY. For guidance regarding proper installation, please see above under "Surface Mount Installation Guidelines".

(2) ANY DAMAGE OR CRACKING DUE TO CHEMICALS OR INCOMPATIBLE CLEANERS WILL VOID THIS WARRANTY.

(3) Grote® LED lamps are designed to work in conjunction with the Grote® ULTRA-BLUE SEAL® Wire Harness System including Grote® factory molded pigtails for use with the Grote® ULTRA-BLUE SEAL® Wire Harness System . Therefore, Grote® LED lamps have a Limited Warranty based on the following criteria:

A – Grote® SuperNova® high performance LED lamps are covered by a ten-year (10) Limited Warranty when installed with male pin, hard shell or patented double-seal pigtail connectors.

1) Grote® SuperNova® high performance LED lamps are covered by a three-year (3) Limited Warranty when installed with hardwire bullet connectors.

2) Grote® SuperNova® high performance LED lamps are covered by a two-year (2) Limited Warranty when installed with hardwire termination.

B – Grote® MicroNova® high performance LED lamps are covered by a three-year (3) Limited Warranty when installed with hardwire bullet connectors.

C – Grote® Hi Count® LED lamps (part numbers that begin with a G) are covered by a two-year (2) Limited Warranty.

D – Grote® WhiteLight LED lamps are covered by a three-year (3) Limited Warranty.

E – Grote Select® high value LED Stop/Tail/Turn and Back-up lamps are covered by a two-year (2) Limited Warranty. Grote Select® LED Flood Lamps are covered by a one-year (1) Limited Warranty.

F – Grote Brite Zone® LED lamps are covered by a two-year (2) Limited Warranty.

G – Grote® Warning & Hazard LEDs are covered by a two-year (2) Limited Warranty.

1) Any and all LED Devices powered by common household-type batteries are not covered by Grote's Limited Warranty.

H– Other Grote® LED lamps for FMVSS applications excluding SuperNova®, MicroNova®, WhiteLight and Hi Count® are covered by a two-year (2) Limited Warranty.

I – Other Grote® LED lamps (non-FMVSS) are covered by a one-year (1) Limited Warranty.

J – Grote® XTL® products are covered by a one-year (1) Limited Warranty.

	Termination Style					
LED Brand Category	**Male Pin**	**Hard Shell**	**Female Pin**	**Hardwire w/ Bullet Connectors**	**Hardwire**	**Patented Double-Seal Pigtail**
Grote® SuperNova®	10	10	N/A	3	2	10
Grote® MicroNova®	N/A	N/A	N/A	3	N/A	N/A
Grote® Hi Count®	N/A	N/A	2	N/A	2	N/A
Grote® WhiteLight	3	3	3	3	3	N/A
Grote Select®	N/A	N/A	2	N/A	1	2
Grote® XTL®	N/A	1	N/A	1	1	N/A
Grote® Brite Zone®	N/A	N/A	N/A	N/A	2	N/A
Grote® Warning & Hazard LEDs	2	N/A	N/A	2	2	N/A
Grote® LEDs (FMVSS)	2	N/A	2	2	2	N/A
Grote® LEDs (non-FMVSS)	N/A	N/A	N/A	1	1	N/A

N/A - Not Available or None

Number represents the years of warranty from manufacture date

QUALITY SYSTEMS:

Product within the catalog may be manufactured under various quality system certifications. If a customer requires particular quality certifications on specific products, they may contact Grote® Industries for detailed information.

END USER RESPONSIBILITY:

Each user bears full responsibility for making their own determination as to the suitability of Grote® materials, products, recommendations, or advice for their own particular use. Each user is ultimately responsible to identify and perform tests and analyses necessary to assure that its finished parts incorporating Grote® products will be safe and suitable for use under end-user conditions. Nothing in this or any other document, nor any oral recommendation or advice, shall be deemed to alter, vary, supersede, or waive any provision of this Limited Warranty or this Disclaimer, unless any such modification is specifically agreed to in writing signed by a Grote® Industries Representative.

 © 2019 All Rights Reserved, Grote® Industries, Inc.

INTELLECTUAL PROPERTY:

No statement contained herein concerning a possible or suggested use of any material, product or design is intended, or should be construed, to grant any license under any patent or other intellectual property right of Grote® Industries or any of its subsidiaries or affiliates covering such use or design, or as a recommendation for the use of such material, product or design in the infringement of any patent or other intellectual property right.

The information in this catalog is deemed correct at the time of publication and is provided in good faith. There may be inaccuracies due to legislative changes, competitive part number changes, technological advances or typographical errors. Customers should contact Grote® Industries for updated information.

WARRANTY RETURN AND REPLACEMENT INSTRUCTIONS

To be eligible for limited warranty consideration, either contact your Grote® sales representative or call Grote® customer service at **800.628.0809** (in Canada, call **800.268.5612**). Upon issuance of a returned goods authorization number, return the failed product, freight prepaid to: Warranty at Grote® Industries, Inc., 2600 Lanier Drive, Madison, Indiana 47250. In Canada, return product, freight prepaid to: Warranty at Grote® Industries Co., 230 Travail Road, Markham, Ontario L3S 3J1. Any product covered under the terms of the respective limited warranty will be replaced directly to the original consumer/purchaser only. Items received by Grote® will not be returned unless accompanied by a specific written request. The product to be returned will be those items not covered under the warranty and will be returned to sender freight collect.

CONSUMER RIGHTS IN VARIOUS STATES

This warranty gives you specific legal rights, and you may have other rights that vary from state to state. Some states do not allow limitations on how long an implied warranty lasts, so the above limitations may not apply to you. Further, some states do not allow the exclusion or limitation of incidental or consequential damages so the above limitation or exclusion may not apply to you.

Effective October 1, 2019

TRUCK-LITE®-TO-GROTE® INTERCHANGE

Truck-Lite® PN	Grote® Form, Fit & Function	Grote® Fit & Function
41	40232	
43	40192	
45	41002	
52	41012	
54	41032	
172	44530	
173	44540	
182	44690	
183	44700	
262	44810	
263	44820	
266	44730	
270	44010	
275	44010	
276	44030	
282	44710	
283	44720	
285	44891	
320	73140-5	
528	52492	
529	52482	
540	50852	
541	50862	
794	49140	
797	71152	
798	71422	
900	48072	
901	48072	
902	48072	
905	48272	
910	48072	
1050	G1032	
1052	G1002	
1058	47122	
1075	G1082	
1203	46782	
1211	46792	
1213	46792	
1215	49082	
1222	45932	
1233	45462	
1259	45262	
1264	45932	
1507	46882	
1520	45512	
1560	G1502	
1960	47092	
2150	G2102	
2660	G4602	
2702	53052	
2750	G5300	
2758	G5540	
2759	G5530	
2803	53020	
3050	G3002	
3058	47112	
3070		G3002 + 43150
3612	52522	
3616	52522	
3801	56000	
3802	56000	
3806	56000	
3812	53000	
3850	55220	
3860	55280	
3861	55290	
3863	50630	
4015	50942	
4016	50952	
4017	50952	

Truck-Lite® PN	Grote® Form, Fit & Function	Grote® Fit & Function
4018	50942	
4023	52902	
4024	52912	
4025	52832	
4026	52822	
4027	50972	
4028	52602	
4050	G4002	
4051	G4022	
4058	54342	
4095	66905	
4550	G4502	
4558	G4502	
4742	55420	
4854	55450	
4855	55460	
5015	53722	
5070	G5092	
5071	G5082	
5072	G5212	
6050	G6002	
6051	G6012	
6053	53592	
6058	G6002	
6503	56072	
7038	12201-5	
7039	12004	
7223	12263-5	
7224	12263-5	
8004		64261-4
8140	64G01	
8150	63871	
8155	63601	
8160	BZ201-5	
8170	BZ201-5	
8180	63F81	
8861	99912	
8909	90232	
8933	90202	
8938	91502	
9004	90302	
9005	90052	
9006	91962	
9007	91962	
9016	91582	
9021	91582	
9029	90012	
9040	92172	
9049	91302	
9057	91992	
9063	91502	
9071	91302	
9079	91502	
9093	90122	
9101	68130	
9102	68170	
9104	68080	
9105	68130	
9107	68110	
9162	68080	
9179	43673	
9180	94110	
9536	51012	
9537	51002	
9944		77931
10401	94010	
10403		67050 + 92920
10410		42180 + 66850
10413		43690 + 67050
10414		93750 + 67001
10702	92070	
10704	91410	
10708	92920	

© 2019 All Rights Reserved, Grote® Industries, Inc.

TRUCK-LITE®-TO-GROTE® INTERCHANGE

Truck-Lite® PN	Grote® Form, Fit & Function	Grote® Fit & Function
10713	91400	
10714	92070	
10721		42180
10725		93750
10727		42180
10728	43690	
10729		43512
10730	43522	
14701	93402	
15054	60381	
15058	60341	
15060	60381	
15208	60261	
15227	60671	
15404	43970	
15405	43970	
15412	43370	
15413	43370	
15414	43380	
15702	91380	
15727	43370	
15728	43380	
15729	43830	
15730	43830	
15733	43370	
17003	60191	
17200	60191	
19206	60291	
19721	43850	
19723	43120	
19724	43120	
19736	43120	
26330	60151	
26331	60101-5	
26335	60001	
26336	60251	
26371	60001-3	
27270	90941-5	
27450	90941-5	
30286	77193	
30401	94100	
30402	92150	
30404	93750	
30405	93760	
30407	43690	
30700	92120	
30701	92120	
30702	92150	
30704	92150	
30711	92120	
30721	93750	
30722	93760	
30726	93760	
30727	43690	
30728	43532	
30729	93750	
33711	42110	
33712	94350	
40012	62321	
40044	62181	
40203	61051	
40204	62271	
40212	62321	
40244	62171	
40403	91740	
40700	91740	
40715	43642	
40720	43572	
40725	43655	

Truck-Lite® PN	Grote® Form, Fit & Function	Grote® Fit & Function
40756	51032	
40757	51022	
40850	50820	
42722	43272	
44101	77363	
44102	77362	
44114	77352	
44705	43343	
45700	94180	
45701	43642	
45720	43212	
50202		01-6757-R3
50203		01-6761-T9
50301		01-6620-95
50303		01-6620-U9
50304		05-2005-54
50307	05-2013-25	
50309		01-3650-U9
50325		01-6682-72 or 01-6682-73
50342	01-6682-72	
50343	01-6682-73	
50831	93190	
50860	87860	
50896	87250	
60120	47472	
60403		92420 + 67090
60700	92420	
60704	92720	
60719	42103	
60720	43362	
60722	43952	
60723	43362	
60728	43952	
60730	43362	
60733	43952	
60734	77363	
70300	55220	
70311	50630	
80220	63971	
80304	50222	
80340	62011	
80344	62151	
80350	61821	
80352	61821	
80360	64931-5	
80361	64931-5	
80364	64441	
80373	64921	
80394	64891	
80395	64891	
80396	64891	
80438	64931-5	
80444	61371	
80482	61161	
80490	61031	
80493	64H01-5	
80513	06021-4	
80514	06021-4	
80525	06021-4	
80561	91051	
80567		05001-5
80568		05001-5
80571	90971-5	
80591	05001-5	
80720	43262-5	
80722	43262-5	
80800	64291-4	
80805	64291-4	
80878	78563	
80879	78563	
80888	64261-4	
80893	64261-4	

Truck-Lite® PN	Grote® Form, Fit & Function	Grote® Fit & Function
80900		64261-4
80910	64241	
80920	64251	
80930		64261-4
80940		64261-4
80950	64241	
80951	64251	
80952	64241	
80953	64251	
80954	64241	
80955	64251	
80956	64241	
80957	64251	
80958	64241	
80959	64251	
80960	64241	
80961	64251	
81380	64E01	
81500	63F21 or 63F71	
81510	63981 or 63991	
81520	BZ601-5	
81702	63H81	
81704	63H81	
81712	63H11	
81804	63H81	
91242	56072	
92550	77193	
92560	77013	
92563	77013	
92600	77003	
92602	76983	
92674	77931	
92677	77931	
92871	77351	
92884	77931	
92885	77353	
92900	73040	
92901	73040	
92902	73090	
92904	73030	
92905	73080	
92909	73040	
92910	73040	
92911	73110	
92918	73160	
92924	73090	
92925	44421	
94706	66830	
94707	66861	
94718	66930	
94729	66981	
94750	66810	
94802	66811	
94850	66800	
94853	66820	
94862	66930	
94882	66844	
94897	66831	
94902	67050	
94909	67050	
94916	67050	
94919	67050	
94924	67050	
94925	67010	
94926	67000	
94931		67090
94932	66810	
94940	68380	
94961	67011	
94962	66812	
94964	66801	
94972	66801	
94992	67010	

 © 2019 All Rights Reserved, Grote® Industries, Inc.

TRUCK-LITE®-TO-GROTE® INTERCHANGE

Truck-Lite® PN	Grote® Form, Fit & Function	Grote® Fit & Function
94993	67090	
96106	66910	
96107	67002	
96930	66360	
96960	66160	
97005	66931	
97224		64261-4
97252	77363	
97283	44090	
97334	92513	
97360	72110-5	
97361	72100-5	
97609	12020	
97610	12020	
97611	28162	
97612	28031	
97619	28162	
97620	28031	
97621	28663	
97623	28041	
97624	16284	
97625	16294	
97627	16244	
97628	16244	
97629	16202	
97631	16173	
97632	16043	
97633	28393-5	
97636	16142	
97653	12073	
97654	12072	
97655	12243-5	
97659	12193-5	
97660	12111-5	
97669	28453	
97670	12333	
97671	12331	
97672	12303	
97673	12301	
97674	12333	
97675	12333	
97676	12331	
97687	28443	
97688	12153	
97693	26012-5	
97695	16041	
97718	11303	
97721	10025	
97725	22233	
97726	22232	
97733	11293	
97802	28032	
97803	16033	
97804	16032	
97805	12113-5	
97806	16091	
97807	12071	
97808	16101	
97809	16053	
97811	16092	
97812	16023	
97817	12173	
97818	16102	
97820	28042	
97822	16093	
97823	10173	
97826	16063	
97827	16223	
97828	10173	
97829	22193	

Truck-Lite® PN	Grote® Form, Fit & Function	Grote® Fit & Function
97831	12272-5	
97835	12020	
97840	28461	
97843	22013	
97845	29060	
97846	28193	
97847	12303	
97848	12333	
97860	16023	
97861	16273	
97862	28493	
97863	12010	
97865	28763	
97866	16153	
97869	10623	
97940	99180	
97960	43901	
97989	64890	
98100	40641	
98101	40650	
98104	40650-5	
98105	40641-5	
98107	41080	
98127	41160	
98136	40650	
98137	40641	
98153	41121	
98165	41133	
1001D	45022	
10028R	45072	
10028Y	45073	
10050R	47472	
10050Y	47473	
10051R	47202 + 66840	
10075R		47232 + 91400 + 66840
10075Y		47233 + 91400 + 66840
10076R		47232 + 91400 + 66850
10076Y		47233 + 91400 + 66850
10079R		47372 + 66840
10079Y		47373 + 66840
10085R		47232 + 91400 + 66850
10085Y		47233 + 91400 + 66850
10086R		47232 + 91400 + 66850
10086Y		47233 + 91400 + 66850
10089R		47373 + 66850
10089Y		47373 + 66850
10090R		47232 + 91400 + 66850
10090Y		47233 + 91400 + 66850
10091R		47372 + 66850
10091Y		47373 + 66850
10092R		47232 + 43162 + 66850
10092Y		47233 + 43162 + 66850
10202C	45811	
10202R	45812	
10202Y	45813	
10203R	45322	
10203Y	45323	
10209C	45811	
10212Y	78343	
10213Y	78343	
10250R	47122	
10250Y		47123 + 67001
10251R		47122 + 43160

Truck-Lite® PN	Grote® Form, Fit & Function	Grote® Fit & Function
10251Y		47123 + 43160
10275R	47232	
10275Y	47233	
10276R	G3092	
10276Y	47223	
10279R	47372	
10279Y	47373	
10286R	46142	
10286Y	46143	
10288Y		47423 + 66840
10289R		47372 + 66840
10289Y		47373 + 66840
10379R	47372	
10379Y	47373	
10389R	47372	
10389Y	47373	
10391R		47232 + 43162
10391Y		47233 + 43162
1050A	G1033	
10519R	45042	
10519Y	45043	
1051A	G1043	
10520R		93750 + 45812 + 67050
10525R	45072	
10525Y	45073	
1052A	G1003	
1058-3	47122-3	
1058A	47123	
1058A-3	47123-3	
1070A	47373	
1071A	47373	
10744R	49142	
1075A	G1083	
1155A	G5053	
1203A	46783	
1211A	46793	
1211W	46791	
1213A	46793	
1222A	45933	
1233A	45463	
1259A	45263	
1264A	45933	
1312A	45333	
1320AD	46543-5	
14200R	45232	
14200Y	45233	
15006R	43370	
15006Y	43370	
15008R	43380	
15008Y	43380	
15011UB	60280	
15050R	49182	
1507A	46883	
15200C	60271	
15200R	46412	
15200Y	46413	
15201R	45162	
15201Y	45163	
15208UB	60261	
1520A	45513	
15250R	47082	
15250Y	47083	
15506R	45082	
15506Y	46422-5	
1555A	45253	
1560A	G1503	
1570A	46393	
15741R	49172	
15745R	49172	
18300Y		45713
19200C	60301	
19200R	46742	

© 2019 All Rights Reserved, Grote® Industries, Inc.

TRUCK-LITE®-TO-GROTE® INTERCHANGE

Truck-Lite® PN	Grote® Form, Fit & Function	Grote® Fit & Function
19200Y	46743	
19205Y	78393	
19250R	47092	
19250Y	G1903	
19275R	47492	
19275Y	47493	
19350R		47492
19350Y		47093 + 66981
19375Y		G1903
1960A	G1903	
21002R	46082	
21002Y	46083	
21051R		47072 + 66910
21051Y		47073 + 66910
21201R	46072	
21201Y	46073	
21210Y	78363	
21251R	47072	
21251Y	47073	
21271R		54002 + 66815
21275R	47162	
21275Y	47163	
21506R		46832 + 66910
21506Y		46833 + 66910
21507R		46872 + 66910
21507Y		46873 + 66910
2150A	G2103	
21880R	47072	
21880Y	47073	
22002R		53062 + 66905
22002Y		52193 + 66843
22004Y		53063 + 66905
22006Y		53063
25250Y	47063	
25750Y	47063	
25760Y	45503	
25761Y	46813	
25765Y	46913	
25766Y	46913	
26311R	46282	
26311Y	46283	
26315R	45172	
26315Y	45173	
263-4	44860	
26394C	60361	
2660A	G4603	
26741R	49002	
26760Y	45993	
26762Y	92773	
26765Y	46543	
27270C	90941-5	
27450C	90951-5	
27640C	94421-5	
27645C	94411-5	
29004C		60331 + 66911
29202R	45442	
29202Y	45443	
29204C	60331	
30075R		46132 +92120 + 67050
30075Y		46133 +92120 + 67050
30085R		46132 + 92120 + 67050
30085Y		46133 + 92120 + 67050
30086Y		47113 + 92120 +67050
30090R		46132 + 42180 + 67050
30090Y		46133 + 42180 + 67050
30091R		G3002 + 43150 + 67050
30091Y		G3003 + 43150 + 67050
300A	77103	
30200C	45821	
30200R	45822	
30200Y	45823	
30201R	47102	
30201Y	47103	
30204R	45822	
30204Y	45823	
30222R		45822 + 43150
30230Y	78333	
30257Y	78333	
30264Y	78433	
30269Y		78433 + 43150
30272R		47112 + 43150
30272Y		47113 + 43150
30276R	47212	
30276Y	47213	
30277R		47112 + 43152
30277Y		47113 + 43152
30279R		46142 + 67050
30279Y		46143 + 67050
30286Y	77193	
30288R		G3002 + 43152 + 67050
30288Y		G3003 + 43152 + 67050
30289R		G3002 + 43152 + 67050
30289Y		G3003 + 43152 + 67050
30375R		46132
30375Y	46133	
30379R		46132 + 43150 + 67050
30379Y		46133 + 43150 + 67050
30503R	45062	
30503Y	45063	
3050A	G3003	
3058-3	47112-3	
3058A	47113	
3070A		G3003 + 43150
30740R	49142	
3075A	G3093	
307A	77103	
307B	77105	
307R	77102	
328d	73140-5	
329d	73150-5	
33010C	60721	
33050R	49322	
33050Y	49323	
33075R	49332	
33075Y	49333	
33080R	49332	
33080Y	49333	
33208R		49362 + 42292
33210C	60651	
33250R	49332	
33250Y	49333	
33260Y	49323	
35001R	65512	
35001Y	65513	
35080R	47242	
35080Y	47243	
35200R	47242	
35200Y	47243	
35375R	47462	
35375Y	47463	
35740R	49122	
35880R	47242	
35880Y	47243	
36041C	60781	
36042C	60701	
36115R		47972
36115Y		47973
36140C	60691	
36203R		49382
36203Y		49383
3754D	50642	
3756D	50642	
3850AA	55223	
40002R	52782	
40002Y		52773 + 91740 + 67000
40006R		52770 + 91740 + 67000
40009R		52152 + 67000 + 91740
40015R		52672 + 67000 + 91740
40028R	52782	
40042R	52782-3	
40202R	52922	
40202R3	52772-3	
40202Y	52773	
40206R	52770	
40209R	52152	
40215R	52672	
40226R		52672 + 92510
4023Y106	52902	
40242R	52772	
40242R3	52772-3	
40242Y	52773	
40248R	52672	
4024Y106	52912	
40282R	52922	
40282Y	52923	
40285R	52672-3	
4051A	G4023	
4058-3	54342-3	
4060C	62691	
4091A	52063	
4094A		52063 + 66905
4095A		53063 + 66905
41a	40233	
433WD	60151	
434WD	61501	
43a	40193	
44002R		53253 + 66830
44022R		53272 + 67002
44036R		53292 + 67002
44092Y		54313 + 92512
44093Y		54313 + 92510
44094Y		54313 + 91740
44095Y		54313 + 92511
44101R	77352	
44101Y	77353	
44102R		77352 + 91740 + 67002
44102Y	77353	
44103R	77352	
44103Y	77353	
44104R	77352	
44104Y	77353	
44110Y	77353	
44114Y	77353	
44144Y	77353	
44181C		62101 + 92511 + 66862
44182C		62101 + 92512 + 66862
44202R	53312	

 © 2019 All Rights Reserved, Grote® Industries, Inc.

TRUCK-LITE®-TO-GROTE® INTERCHANGE

Truck-Lite® PN	Grote® Form, Fit & Function	Grote® Fit & Function
44211R	77352	
44211Y	77353	
44212R	77352	
44212Y	77353	
44213R	77352	
44213Y	77363	
44214R	77352	
44214Y	77353	
44217Y	77353	
44218Y	77353	
44231Y		53282 + 67002
44248Y	77353	
44249Y	77353	
44253R		52092 + 67002
44291Y		54313 + 92512
44292Y		54313 + 92510
44293Y		54313 + 91740
44294Y	54313	
44295Y		54313 + 92511
44302R	53552	
44331R	53272	
44344C		62101 + 92511 + 66862
44345C		62101 + 92510 + 66862
44346C		62101 + 92512 + 66862
44348C		62101 + 92512 + 66862
44349C		62101 + 92510 + 66862
44350C		62401 + 67013
44350R	53532	
44355R	54332-3	
44361R	54622	
44438C	61171	
44882R	53552	
44982R	53552	
44991C		62101 + 92511
44992C	62791	
45002R		52203 + 94180 + 67090
45002Y		52203 + 94180 + 67090
45051R		G4502 + 94180 + 67000
45201Y	52203	
45202R	52202	
45202Y	52203	
45a	41003	
49002R	53112	
49003C	62121	
49202R	53102	
49203C		62121 + 91740 + 67013
5015K	53722	
5050DK	65320-5	
5051DK	65330-5	
50-60202R-3	52182-3	
50-60202Y-3	52183-3	
52a	41013	
5315Y101	53762	
533DK	65230-5	
534D	52312-5	
535D	52302-5	
54a	41033	
60002R	52572	
60004C	62251	
60015Y	52253	
60050R	53122	
60052R		53592 + 66830

Truck-Lite® PN	Grote® Form, Fit & Function	Grote® Fit & Function
60056R		53622 + 66830
60072Y		53593 + 66830
60075Y	53123	
60083R	53092	
60083Y	53093	
60085R	53122	
60115Y		54183 + 66830 + 92420
60120R	77362	
60120Y	77363	
60122R	77362	
60122Y	77363	
60124R	77362	
60124Y	77363	
60126R	77362	
60126Y	77363	
60201R	52182	
60201Y	52893	
60202R	52182	
60202Y	52183	
60204C	62521	
60215Y	52193	
60250R	53962	
60252R	53592	
60256R	53622	
60272Y	53593	
60275Y	53963	
60276Y	53623	
60283R	52182	
60283Y	52183	
60315Y	54193	
60317Y	54213	
60360R	77362	
60360Y	77363	
60362R	77362	
60362Y	77363	
60364R	77362	
60364Y	77363	
60366R	77362	
60366Y	77363	
60420Y	54213	
60421Y	54193	
6050A	G6003	
6051A	G6013	
6053-3	53592-3	
6053A	53593	
6058-3	G6002-3	
6058A	G6003	
6058A-3	G6003-3	
6060C	62751	
6063C3	62601-3	
60872Y	53593	
60885R	53962	
60891Y	53963	
612W	63531	
620W	64101	
620W4	64921	
629WD	63181-5	
630W	64931	
630W4	64101	
633W	64991	
6503A	56073	
6600A	78033	
66050R		53962 + 66830 + 92420
66052R		53592 + 66830
66056R		53622 + 66830
66206C		62051 + 43222
66252R	53592	
66256R	53622	
6660PS		77931
66882R	53592	
69202Y	52533	

Truck-Lite® PN	Grote® Form, Fit & Function	Grote® Fit & Function
70310R	50642	
7044D	12014-5	
7044DB	12014	
7048D	12164-5	
7048DB	12164	
80162C	61991	
80250C	61291	
80251C	61E51	
80251C3	61E61-3	
80255C	61F61	
80255C3	61F61-3	
80302R	50222	
80322R		90013 + 50222
80324R	50532	
80334R	50232	
80335R	52522	
80339R	50502	
80423C	60311	
80462R	50862	
80463R	50852	
81335C	64M11-5	
8180-3	63G01	
8370A		77931
8370B		77931
8370R		77931
8370W		77931
8861A	99913	
8933A	90203	
8938A	91503	
9004A	90303	
9005A	90053	
9005W	90051	
9006A	91963	
9007A	91963	
9007G	91964	
9007W	91961	
9016A	91583	
9016W	91581	
9021A	91583	
9029A	90013	
9029W	90011	
90327R	50132	
9040A	92173	
9057A	91993	
9063A	91503	
9078A	91503	
9079A	91503	
9080A	91513	
9093A	90123	
9093W	90121	
91241Y	55983	
91242R	53422	
91243Y	55993	
91244R	53422	
91315Y	54343	
92525Y	76713	
92530Y	77323	
92531Y	77323	
92534C	77101	
92534Y	77103	
92550Y	77353	
92551Y	77363	
92552Y	77353	
92554Y	77013	
92600Y	76223	
92602Y	76033	
92642Y	76983	
92644Y	76993	
92646Y	76993	
92695R	77462	
92695Y	77463	
92696R	77462	
92696Y	77463	

© 2019 All Rights Reserved, Grote® Industries, Inc.

TRUCK-LITE®-TO-GROTE® INTERCHANGE

Truck-Lite® PN	Grote® Form, Fit & Function	Grote® Fit & Function
92865Y	77813	
92870B	77465	
92870C	77461	
92870R	77462	
92870Y	77463	
92WD	62021	
9341A	90233	
94902UB	67050	
94902-UB	66850	
94993UB	67090	
98006r	40152	
98006y	40153	
98031r	41042	
98031y	41043	
98154r	41122	
98175r	41142	
98175y	41143	
98176r	41152	
98176y	41153	
99007C	90761	
99007R	90232	
99007Y	90233	
99008C	91311	
99008R	90012	
99008Y	90013	
99009Y	90233	
99039Y	90303	
99041R	90152	
99041Y	90153	
99066Y	92773	
99090Y	90233	
99095C	90221	
99167Y	90103	
99168R	99842	
99168Y	99843	
99169R	99832	
99169Y	99833	
99170R	99802	
99170Y	99803	
99171R	99912	
99171Y	99913	
TL00801	43690	
TL10202R	45812	
TL10202Y	45813	
TL10205R	45832	
TL10205Y	45833	
TL10212Y	78343	
TL10250R	47122	
TL10275Y	47233	
TL10279Y	47373	
TL10379R	47372	
TL10379Y	47373	
TL1050	G1032	
TL1050A	G1033	
TL10700	91410	
TL10708	92920	
TL10738	43690	
TL1075	G1082	
TL1075A	G1083	
TL1203	46782	
TL1211	46792	
TL1211A	46793	
TL15011	60280	
TL15200Y	46413	
TL15205	60421	
TL1560	G1502	
TL1560A	G1503	
TL15728	43380	
TL19200C	60301	

Truck-Lite® PN	Grote® Form, Fit & Function	Grote® Fit & Function
TL19200R	46742	
TL19200Y	46743	
TL19205Y	78393	
TL19250Y	G1903	
TL1960	G1902	
TL1960A	G1903	
TL19721	43850	
TL21002R	46082	
TL21002Y	46083	
TL21201R	46072	
TL21275Y	47163	
TL2150	G2102	
TL2150A	G2103	
TL22202Y	53063	
TL2660	G4602	
TL2660A	G4603	
TL2750	G5300	
TL29203R	46872	
TL29203Y	46873	
TL30200R	45822	
TL30200Y	45823	
TL30230Y	78333	
TL30250R	47112	
TL30257Y	78333	
TL30375Y	46133	
TL30404		93750 + 67050
TL3050	G3002	
TL3050A	G3003	
TL3075A	G3093	
TL33050R	49342	
TL33050Y	49343	
TL33075R	49332	
TL33203R	49362	
TL33250R	49332	
TL33250Y	49333	
TL35001R	65512	
TL35001Y	65513	
TL40002R	52782	
TL40202R	52772	
TL40282R	52922	
TL40282Y	52923	
TL4050	G4002	
TL4050A	G4003	
TL4051A	G4022	
TL4060C	62691	
TL4095	66905	
TL44030R	53462	
TL44102Y	77353	
TL44211Y	77353	
TL44302R	53552	
TL44322R	53292	
TL44355R	54332-3	
TL45202R	52202	
TL45202Y	52203	
TL4550	G4502	
TL60015Y	52253	
TL60050R	53122	
TL60120R	77362	
TL60120Y	77363	
TL60202R	52892	
TL60215Y	52193	
TL60250R	53962	
TL6050	G6002	
TL69202Y	52533	
TL80251C	61E51	
TL80520	63531	
TL9049	91302	
TL9079A	91503	
TL9080A	91513	
TL92560	77013	
TL93745	66931	
TL94862	66930	
TL94897	66831	

Truck-Lite® PN	Grote® Form, Fit & Function	Grote® Fit & Function
TL94902	67050	
TL94992	67010	
TL94993	67090	
TL96930	66360	
TL98006R	40152	
TL98006Y	40153	
TL98031Y	41043	

PETERSON®-TO-GROTE® INTERCHANGE

Peterson® PN	Grote® Form, Fit & Function	Grote® Fit & Function
45	43424	
294	G6151	
335	50630	
367	61871	
368	61861	
400	60001	
415	62271	
425	50232	
428	50852-3	
435	60151	
438	60101	
445	50920	
449	71422	
454	50992	
459	71152	
500	48272	
554	44810	
557	44820	
570	44530	
571	44540	
572	44891	
573	44690	
574	44700	
576	44710	
577	44720	
598	18302-5	
605	28032	
608	12182	
609	12071	
615	16244	
616	16092	
654	28032	
711	63821	
780	73080	
781	73080	
782	73030	
784	73030	
785	73080	
810	28323-5	
821	28093-5	
830	12243-5	
832	12113-5	
833	12263-5	
836	12263-5	
845	G5202	
2593	42180	
2594	42180	
4223	G6013	
4224	G4002	
4469	65513	
4470	65512	
5000	44030	
5100	44010	
5124	44010	
100-15A	90163	
100-15R	90162	
107-15A	92433	
107-15R	92432	

 © 2019 All Rights Reserved, Grote® Industries, Inc.

PETERSON®-TO-GROTE® INTERCHANGE

Peterson® PN	Grote® Form, Fit & Function	Grote® Fit & Function
107-3R	49112	
107WA	46883	
107WR	46882	
108-15A	90203	
108-15R	90202	
108WA	46713	
108WR	46712	
110-15A	90303	
110-15R	90302	
118-15A	91683	
119-15A	90053	
119-15R	90052	
119A	45173	
119R	45172	
1200R	47912	
120-49	68380	
1217R-9	53552	
123A	46283	
123R	46282	
124-15A	90923	
124-15R	90922	
127-18	93402	
127-181	93400	
130-25A	91043	
130-25R	91042	
134-15A	90123	
134-15R	90122	
135A	45263	
135R	45262	
136-15A	90153	
136-15R	90152	
136-3R	49062	
136A	45253	
136R	45252	
138-15A	91963	
138-15R	91962	
138A	46793	
138R	46792	
142-09	93750	
142-18	91410	
142-18K	94000	
142-49	67050	
142A	45813	
142KA	45043	
142KR	45042	
142R	45812	
143-092	43512	
143-18	91400	
143-18K	94010	
143A	45833	
143R	45832	
144-18	92920	
146-09	93760	
146-092	43532	
146-18	92120	
146-182	92150	
146A	45823	
146R	45822	
150-09	94233	
150-091	42141	
150-095		94233
150-10	94233	
150-13	94233	
150-14	43960	
150-141	43962	
150-3R	49172	
150-49	66932	
150A	46413	
150C	60261	

Peterson® PN	Grote® Form, Fit & Function	Grote® Fit & Function
150R	46412	
152-09	94233	
152-091	94233	
152-10	94233	
152-49	67315	
153-09	94233	
153-49	67001	
153A	47083	
153C-142		60671 + 43970
153C-143		60671 + 94233
153C-BT2	60671	
153R	47082	
154-09K	43850	
154-10K		43783 + 66981
154A	46743	
154C	60291	
154KA	45093	
154KR	45092	
154R	46742	
155R	46832	
160-09	43120	
160-49	66930	
160-491	66930	
160-493	66932	
161A	47093	
161KA	65203	
161R	47092	
162-49	67001	
162-493	66851	
162A	47123	
162R	47122	
162Y	G1033	
163A	G1033	
163FA		G1033 + 42170
163FR		G1032 + 42170
163KA		G1033 + 91400 + 67001
163KR		G1032 + 91400 + 67001
163R	G1032	
164A	47113	
164R	47112	
165-10	43690	
165R	G3002	
166A	G3093	
166R	G3092	
168R	45002-5	
173A	G1003	
173R	G1002	
174A	47113	
176-10	42110	
176-11	42292	
176-12	42282	
176-14	42302	
176-16	42312	
176A-BT2	49333	
176BKA		49333 + 42110
176BKR		49332 + 42110
176R-BT2	49332	
188A	G2103	
188R	G2102	
192-492	66862	
19-41	44421	
196A	47123	
196R	47122	
198A	47113	
198R	47112	
2636A		46413 + 91380 + 67050
2636R		46412 + 91380 + 67050
290C	60701	
313-2	53052	

Peterson® PN	Grote® Form, Fit & Function	Grote® Fit & Function
313-2RA	53000	
313AA	53023	
318L		56160-5 + 56180-5
318L-P		56160-5 + 56180-5
318R		56160-5 + 56180-5
318R-P		56160-5 + 56180-5
319AA	56150	
319R	56180-5	
319R-P	56180-5	
326-2	55470	
344-49	66861	
352A	52193	
410-21	99595	
411-07	68170	
413-07	68130	
414-15C	91311	
415K	62221	
417-2	43642	
417-48	66862	
417-481	66860	
417-49	66861	
417-491	66860	
417-491MP	67006	
417-493	67006	
418R-3P		54572 + 66861
420C-5P		62561 + 66842
420KR-5		53962 + 92420 + 66830
420R-5P		53962 + 66830
421-09	43362	
421-19	67014	
421-49	67014	
421-491	67090	
421-491Y	66810	
421A	52183	
421KR	52572	
421R	52182	
423C-5P		62561 + 43222 + 66842
423R-5	53622	
423R-5P		53622 + 66830
424-09	92512	
426-09	43572	
426-10	43655	
426A	52923	
426KR	52782	
426R	52922	
431-49	67010	
431-491	67000	
431A	52773	
431KR	53012	
431R	52922	
436-01	93610	
440-15	92792	
440L	52312	
445-25	91302	
4523-49	66870	
464-1	41050	
464-2	41050	
465-1	41160	
465-2	41160	
465-4K	40650-5	
465K	40650-5	
467-1	40641	
467-4K	40641-5	
469-1	41133	
505K	64261-4	
510-9	43112	
55-15A	91113	
55-15R	91112	

© 2019 All Rights Reserved, Grote® Industries, Inc.

PETERSON®-TO-GROTE® INTERCHANGE

Peterson® PN	Grote® Form, Fit & Function	Grote® Fit & Function
608X	12183	
608XO	12293	
616W	16091	
617X	16023	
654X	28033-5	
658X	12272-5	
667X	26012-5	
672X	28493	
701C	90941-5	
702C	94421-5	
703C	94411-5	
717A	55993	
717R	55982	
786-102	73160	
786-97	73220	
817KCR-3		01-5325-83 + 67006
817KR-3		53552 + 91740 + 67006
817R-36	54562	
817R-7	53552	
817TA-2	54363	
818KR-3		53292 + 91740 + 67006
818R-2		53292 + 67006
818R-3		53292 + 67006
820R-10	54142	
820R-2		53962 + 67006
821A-10	G6003	
821A-7	G6003	
821R-7	G6002	
822R-3		G6002 + 43222
824R-3		G4002 + 92512
826A-7	G4003	
826C-7	62691	
826R	54342	
826R-7	G4002	
826R-9	G4002	
845L	G5212	
850R-1		G4502 + 67000
850R-1P		G4502 + 67000
909-MV	63981	
911-MV	63861	
912-MV	BZ111-5	
917-MV	63F51	
B107-15A	92433	
B107-15R	92432	
B1200-09X	93453	
B127-18	94180	
B134-15A	90123	
B134-15R	90122	
B138-15C	91961	
B142-49	67050	
B142-50	67001	
B142-51	67001	
B146-09	93760	
B146-093	93760	
B146-182	92150	
B146-49	66932	
B150-095		94233
B150-141	43962	
B150-141B	43262-3	
B150-142	43962	
B150-143	43962	
B150-18	91380	
B150-181	91380	
B150-491	67120	
B152-49	67400	
B153-49	66981	
B153-492	66981	

Peterson® PN	Grote® Form, Fit & Function	Grote® Fit & Function
B153-493	66982	
B154-092	43230	
B154-11	43780	
B154-11K	43780	
B160-49	66930	
B160-491	66930	
B160-492	66931	
B162-49	67001-3	
B162-493	66851	
B167-09	43780	
B167-49	66981	
B167-491	43780	
B167-492	66801	
B168-092	43120	
B168-092B	43120	
B168-093	43780	
B168-181	43120	
B177-18	60-1084-03	
B193-492	66826	
B2412	66932	
B2712	66932	
B388-09X	93453	
B411-07	68170	
B413-07	68130	
B417-49	66861	
B417-491	66860	
B417-496	66860	
B418-10	92513	
B421-18	92420-3	
B421-19	67014	
B421-49	67014	
B421-491	67090	
B426-18	91740-3	
B431-491	67000	
B450-18	94180-3	
B460A	40193	
B460R	40192	
B474A	40073	
B474R	40072	
B476A	40153	
B476R	40152	
B477A	40093	
B477R	40092	
B479A	41043	
B479R	41042	
B481A	40073	
B481R	40072	
B484A	40303	
B484R	40302	
B485A	40303	
B485R	40302	
B489A	40303	
B489R	40302	
B492A	40133	
B492R	40132	
B5425Y	68420	
B570	44540	
B7005S	43153	
B7007S	43823	
B817-48	68580	
B850-18	94180-3	
M102A	45413-3	
M106A	45933-3	
M112A	46393	
M114R	46982-5	
M120A	99913	
M120R	99912	
M122XA	46893	
M122XR	46892	
M125A	47053	
M125R	47052	
M126A	47053	
M126R	47052	

Peterson® PN	Grote® Form, Fit & Function	Grote® Fit & Function
M127A	45233	
M127R	45232	
M130A	46303-3	
M130R	46302-3	
M135A	45263-3	
M135R	45262-3	
M136A	45253-3	
M138C	46791	
M146C	45821	
M150W	60271	
M153C-BT2	60671-3	
M154C	60291-3	
M160A	47463-3	
M160R	47242-3	
M162R	47122-3	
M164A	G3003-3	
M164R	G3002-3	
M171C	49341-3	
M181A-BT2	49333-3	
M181R-BT2	49332-3	
M196R	47122-3	
M196Y	G1033-3	
M197A	47233-3	
M198A	G3003-3	
M198R	G3002-3	
M2875AF-P	53623	
M290C	60381-3	
M294	G6151	
M360	61261	
M360-BT2	61261	
M365	61F61-3	
M367	61871-3	
M393C	62291	
M400	60001-3	
M411SC	62151	
M417R	53532	
M418R	53182	
M420C-5		62561 + 66842
M420C-5AMP		62561 + 67006
M420C-5P		62561 + 66831
M420C-5PKD		62561 + 67006
M420R-P	G6002-3	
M421R	52892-3	
M423C-5AMP		62561 + 43222 + 67006
M423C-5P		62561 + 43222 + 66831
M423TA-2AMP		53623 + 66815
M423VC-1P		62751 + 43222
M426R	52772-3	
M431KC	62221	
M431KR	52782-3	
M431R	52772-3	
M434	61501	
M435	60151	
M436B	60081	
M507	64931	
M525	63531	
M821A-10	G6003-3	
M821A-7	G6003-3	
M821R-7	G6002-3	
M826C-7	62691-3	
M826R	54342-3	
M826R-7	G4002-3	
M826R-9	G4002-3	
PM-ECK-T	99170	
PMV0099PT	99580	
V106-09	43673	
V114A	46983-5	
V126A	47053	
V143R	45832	
V153KC-MV		60671 + 43970
V171C	49341	

 © 2019 All Rights Reserved, Grote® Industries, Inc.

PETERSON®-TO-GROTE® INTERCHANGE

Peterson® PN	Grote® Form, Fit & Function	Grote® Fit & Function
V25900-09	43272	
V294	G6151	
V313-2RA	55280	
V369S	60591	
V379S	61171	
V421R	52182-5	
V423XR-4	52592-5	
V426R	52922-5	
V428	50852	
V428S	50862	
V434	61501-5	
V437	60251	
V440L	52312-5	
V456	52482	
V456L	52492	
V472A	40233	
V472R	40232	
V475A	40063	
V475R	40062	
V480A	41033	
V480R	41032	
V483A	40303	
V483R	40302	
V487A	40133	
V487R	40132	
V490A	40053	
V490R	40052	
V500	48272	
V520-40	44840-5	
V5325	68540	
V540	65370-5	
V5425Y	68420	
V570	44530	
V582-2	64371-5	
V599	12312-5	
V600	12201-5	
V602	12164	
V603	12004-5	
V603B	12004	
V603L	12014	
V604	12312-5	
V7004	43153	
V7005	43153	
V7007	43163	
V7009	92513	
V7010	42153	
V7011	42153	
V780	73080	
V781	73080	
V783	73080	
V845	G5082-5	
V904-MV	BZ601-5	
V910-MV	BZ201-5	
V911-MV	BZ101-5	
V940	65330-5	

PRIMATRONICS®-TO-GROTE® INTERCHANGE

Primatronics® PN	Grote® Form, Fit & Function	Grote® Fit & Function
PT1000A	45813	
PT1000A-ABS	78343	
PT1000BK	43512	
PT1000G	91410	
PT1000GK	94010	
PT1000R	45812	
PT1000R-Kit	45042	
PT1000W	45811	
PT1001BK	42180	
PT1002BK		43690
PT1002G	91400	
PT1003BK		42180 + 67050
PT1004G	91410	
PT100A-Kit	45043	
PT1050R	49142	
PT1100A	45833	
PT1100R	45832	
PT1300A	45333	
PT1500A	46413	
PT1500BK		42131
PT1500L	60261	
PT1500R	46412	
PT1500W	60271	
PT1550R	49172	
PT1900A	46743	
PT1900BK	43850	
PT1900L	60291	
PT1900R	46742	
PT1900W	60301	
PT2100A	46083	
PT2100R	46082	
PT2102A	46873	
PT2102R	46872	
PT2110C	60331	
PT2200A	53063	
PT2200R	53062	
PT2601A	45263	
PT2601R	45262	
PT2602A	46793	
PT2602R	46792	
PT2603A	45933	
PT2603R	45932	
PT2605A	46893	
PT2605R	46892	
PT2610A		45233
PT2610R		45232
PT2615A	46783	
PT2615R	46782	
PT2630A	45253	
PT2630R	45252	
PT2640A	46883	
PT2640R	46882	
PT2650A	46893-5	
PT2650R	46892-5	
PT2660R	49112	
PT2700L	60151	
PT2701L	42162	
PT2702L	43960	
PT2703L	60460	
PT2704L	60101	
PT3000A	45823	
PT3000A-AB S	78333	
PT3000A-Kit	45063	
PT3000AS		45813 + 42180
PT3000BK	43532	
PT3000G	92120	
PT3000GK	94100	
PT3000R	45822	
PT3000R-Kit	45062	
PT3000RS		45812 + 42180

Primatronics® PN	Grote® Form, Fit & Function	Grote® Fit & Function
PT3000W	45821	
PT3300A	47103	
PT3300R	47102	
PT4000A	52923	
PT4000BK	43572	
PT4000G	91740	
PT4000MA	53103	
PT4000MR	53102	
PT4000R	52922	
PT4000R-Kit	53012	
PT4000W	62271	
PT4002G	91950	
PT4100R	52672	
PT4200BK	51090	
PT4200L	51032	
PT4200R	51022	
PT4200U	51052	
PT4212RF	50232	
PT4212RF-LN	90012	
PT4500A	52203	
PT4500BK	43212	
PT4500G	94180	
PT4500R	52202	
PT4706P	66860	
PT4707P	68580	
PT4902P		67050
PT4924P	67050	
PT4925P	67010	
PT4926P	67000	
PT4992P	67014	
PT4993P	67090	
PT4999P	67010	
PT5001A		77473
PT5001A-FT		92980
PT5001A-LN		92033
PT5005A	77013	
PT5005A-FT	92960	
PT5110		73040
PT5175		73250
PT5199		73030
PT5315A-FT	90900	
PT5412		44810
PT5413		44820
PT5453		44530
PT5454		44540
PT5469		44690
PT5471		44710
PT5481		44720
PT6000A	52183	
PT6000BK	43362	
PT6000G	92420	
PT6000R	52182	
PT6000R-Kit	53092	
PT6000W	62521	
PT6002G	92720	
PT6106P	67013	
PT6107P	67002	
PT6500A	52193	
PT8005	61821	
PT8010	91302	
PT8020	52442	
PT8021	52452	
PT8428	50872	
PT8428S	50892	
PT8428W	50882	
PT8620	53000	
PT9805A	40053	
PT9805R	40052	
PT9806A	40153	
PT9806R	40152	
PT9807A	40093	
PT9807R	40092	
PT9808A	40073	

© 2019 All Rights Reserved, Grote® Industries, Inc.

PRIMATRONICS®-TO-GROTE® INTERCHANGE

Primatronics® PN	Grote® Form, Fit & Function	Grote® Fit & Function
PT9808R	40072	
PT9832A	41033	
PT9832R	41032	
PTL1004A		G1033
PTL1004R		G1032
PTL1013A		G1033
PTL1013R		G1032
PTL1108A	G1003	
PTL1108R	G1002	
PTL1313A		G1083
PTL1313R		G1082
PTL1503A	G1503	
PTL1503R	G1502	
PTL1508W	60421	
PTL1550R	49182	
PTL1912A	G1903	
PTL1912R	G1902	
PTL1912W	60301	
PTL2002C		G6151
PTL3004A		G3003
PTL3004R		G3002
PTL3009A	G3003	
PTL3009R	G3002	
PTL3309A	G3093	
PTL3309R	G3092	
PTL3507A		47243
PTL3507R		47242
PTL3606A		47243
PTL3606R		47242
PTL4010A		G4003
PTL4010R		G4002
PTL4018A		G4003
PTL4018R		G4002
PTL4019W		62691
PTL4040A		G4003
PTL4040AF		G4003 + 92512
PTL4040R		G4002
PTL4040RF		G4002 + 92512
PTL4040W		62691
PTL4048A		G4003
PTL4048R		G4002
PTL5020		63611
PTL5021	64931	
PTL5030		63G11
PTL5040		63G01
PTL5313A		G4603
PTL5313R		G4602
PTL5505A		45583
PTL5915A		47253
PTL6010A		G6003
PTL6010R		G6002
PTL6027W		62751
PTL6056A	G6003	
PTL6056R	G6002	
PTL8000		G5082
PTL8001		G5092
PTL8020		53662
PTL8020K		65230-5
PTL8021		53672
PTL8620		G5300
PTM0105	12164	
PTM09109	12312-5	
PTM9102	12201-5	
PTM9103	12004	
PTM9104	12014	
PTM9205FB	28152	
PTM9205K	28033	
PTM9205WK	28031	
PTM9206	28663	
PTM9206B		12052 + 11303
PTM9206BK		28042
PTM9206K	28043	
PTM9206WK	28041	
PTM9209	16033	
PTM9209B	16032	
PTM9209H		12283 + 11303
PTM9210	12010	
PTM9217		12293
PTM9217B		12182 + 11303
PTM9217H		12283 + 11303
PTM9219		12173 + 11303
PTM9219B		12172 + 11303
PTM9219H		12283 + 11303
PTM9248		28763
PTM9300A	16244	
PTM9310		16023
PTM9310H	16053	
PTM9310HL	16173	
PTM9320	16123	
PTM9320CV	16043	
PTM9320H-L	16223	
PTM9330	16273	
PTM9330B	16142	
PTM9340	16023	
PTM9340H		16053
PTM9340HL		16223
PTM9350	16093	
PTM9350B	16092	
PTM9350W	16091	
PTM9360B	16102	
PTM9360W	16101	
PTM9370	16284	
PTM9420		28453
PTM9460	28093-5	
PTM9706	28323-5	
PTM9710S	22013	
PTM9712	10173	
PTM9714	11303	
PTM9716	11133	
PTM9717	10073	
PTM9718	10173	
PTM9720	10623	
PTM9724		10013
PTM9726		10025
PTM9730		10045
PTM9800	22193	
PTM9809	28443	
PTM9810	28493	
PTM9830	12153	
PTM9840	10433	
PTM9900	29060	

MAXXIMA®-TO-GROTE® INTERCHANGE

Maxxima® PN	Grote® Form, Fit & Function	Grote® Fit & Function
431-491	67000-3	
B431-491	67000-3	
M09100R	G3002	
M09100WCL		60561
M09100Y	G3003	
M09105R	G3092	
M09105Y	G3093	
M09250R-X	G3002-3	
M09250Y-X	G3003-3	
M09300R		49332
M09300R-X		49332-3
M09300WCL		49341
M09300Y		49333
M09300YAT		49323
M09320R	49332	
M09320R-X		49322-3
M09320Y	49333	
M09320Y-X		49323-3
M09370WCL		77931 + 97942
M09370WCL-NS		60651
M09370Y		77933 + 97942
M09370YCL		77933 + 97942
M09410WCL		49341
M11201R	G1082	
M11201Y	G1083	
M11256R	G1002	
M11256Y	G1003	
M11260R	47232	
M11260Y	47233	
M11300R	G1032	
M11300RCL	G1042	
M11300Y	G1033	
M11300YCL	G1043	
M11350RCL-X	G1042	
M11350R-X	G1032-3	
M11350YCL-X	G1043	
M11350Y-X	G1033	
M16280R	G1032	
M16280Y	G1033	
M16280Y-X		G1092-3
M16800R		G1082
M16800Y		G1083
M20311R	G5052	
M20311Y	G5053	
M20320R	G1502	
M20320Y	G1503	
M20321R		G1502 + 43980
M20321Y		G1503 + 43980
M20323R		49182
M20325		94233
M20328		43980
M20332R	45662	
M20332Y	45663	
M20340R		47242
M20340Y		47243
M20350R	G1902	
M20350Y	G1903	
M20355		43850
M20361Y		47063
M20391R	G2102	
M20391Y	G2103	
M20395R		46832
M20395Y		46833
M23015R		G4602
M23015Y		G4603
M34260R		G3002
M34260Y		G3003
M34600R		G3092
M34600Y	G3093	
M42100R		G4002
M42100Y		G4003
M42120R		G4002 + 92511
M42201R		G4502
M42201Y		G4503
M42213R		G4502
M42213Y		G4503
M42220	G5082	
M42320R		G4002
M42322R		G4002
M42322RCL		G4022
M42322Y		G4003
M42323R		G4002 + 92512
M42323RCL		G4022 + 92512
M42324		62691
M42324-X		62691-3
M42339Y		G4003

 © 2019 All Rights Reserved, Grote® Industries, Inc.

MAXXIMA®-TO-GROTE® INTERCHANGE

Maxxima® PN	Grote® Form, Fit & Function	Grote® Fit & Function
M42341R/Y	G5300	
M42344R	54362	
M42346R		54342
M42346R-X		54342-3
M42347		62691
M42347-X		62691-3
M42348		62101
M42348-X		62101-3
M42354R		54602
M42362R/Y-A	G5530	
M42363R/Y-A	G5540	
M42365R	54342	
M42500R		54342
M42500Y		54343
M42701BCL		77355
M42701R		77352
M42701WCL		77351
M42701Y		77353
M43253		43253
M43900	67150	
M49700	94180	
M50100-B	94010	
M50102-X	92070-3	
M50103		43163
M50300-B	92120	
M50310	43673	
M50312		43230
M50400-B	91740	
M50600-B	92420	
M50600-X	92420	
M50605		43223
M50900	67090	
M50900-100	67090-3	
M50900-X	67090	
M50904		66831
M50908		66861
M50909		44070
M50910		99630
M50911	67000	
M50950	67001	
M50950A-100		68551
M50950-X	67001-3	
M50951	66851	
M50951A-100		68551
M50953		66862
M56100R		G4002
M63100R		G6002
M63100Y		G6003
M63201BCL		77365
M63201R		77362
M63201WCL		77361
M63201Y		77363
M63253	43223	
M63253BLK	43222	
M63318R-A	53582	
M63320		62751 + 42152
M63320R		G6002 + 42152
M63320Y		G6003 + 42152
M63321R-X		G6002 + 42152
M63322R		G6002
M63322RCL		G6003-3 + 42152
M63322Y	G6003	
M63322YCL		G6013 + 42152
M63323R		G6002 + 43222
M63323Y		G6003 + 43222
M63323YCL		G6013 + 43222
M63324		62751 + 92420
M63324-X		62751-3 + 92420-3

Maxxima® PN	Grote® Form, Fit & Function	Grote® Fit & Function
M63339Y		G6003
M63339YCL		G6013
M63340YCL		G6013
M63346R		G6002
M63346R-X		G6002-3
M63347		62751
M63347-X		62751-3
M63352R-X		G6002
M63420R		G6002
M63420Y		G6003
M63450R		G6002
M63450Y		G6003
M84415		61611
M84420-B		60581
M84427-A	61861	
M84429-B	61281	
M84444	61E61	
M85615R		54682
M90061R		53422
M90081Y	55983	
MEG-1	99170	
MHL-07HILO	90941-5	
MHL-4x6HI	94411-5	
MHL-4x6LL	94421-5	
MHL-5X7HILO	90951-5	
MPWL-10	BZ501-5	
MPWL-10WALLCH	BZ801-5	
MPWL-20	BZ501-5	
MPWL-20WALLCH	BZ801-5	
MPWL-30WALLCH	BZ801-5	
MWL-01B	BZ101-5	
MWL-01HP	BZ101-5	
MWL-04		63611
MWL-07SP	BZ301-5	
MWL-12	63821	
MWL-16	63F21	
MWL-19	BZ101-5	
MWL-20	BZ601-5	
MWL-21		63611
MWL-24SP	63J21	
MWL-26	63621	
MWL-28	BZ101-5	
MWL-30	BZ201-5	
MWL-31SP	63E21	
MWL-39	63621	
MWL-40	63991	
MWL-50SP	BZ301-5	
V435	60151	

OPTRONICS®-TO-GROTE® INTERCHANGE

Optronics® PN	Grote® Form, Fit & Function	Grote® Fit & Function
442	50902	
212767	66200	
00212135P	45853	
00212207B	45793	
00212209B	45792	
00212211B	66200	
00212211P	66200	
00212212B	66200	
00212220P	45793	
00212226P	66200	
00212231B	45763	
00212231P	45763	
00212233B	45762	
00212233P	45762	
00212235P	45773	

Optronics® PN	Grote® Form, Fit & Function	Grote® Fit & Function
00212237P	45772	
00212251B	45783	
00212251P	45783	
00212257P	45792	
00212307B	45623	
00212316B	66200	
00212316P	66200	
00212317B	93453	
00212317P	93453	
00212333B	45572	
00212333P	45572	
00212335P	45583	
00212338P	47772	
00212342P	45593	
00212345P	45603	
00212351B	45613	
00212351P	45613	
00212353B		45572
00212353P		45572
00212355P	45623	
00212704P	47913	
00212705P	47912	
00212706P	47923	
00212707P	47922	
442L	50912	
A111GLPBP	42162	
A11AB	92433	
A11ABP	92433	
A11DB	42282	
A11GLPB	42162	
A11RB	92432	
A11RBP	92432	
A2RB	91122	
A2RBP	91122	
A31AB		90203
A31RB		90202
A31RBP		90202
A33GB	94180	
A33GBP	94180	
A38AB	90203	
A38ABP	90203	
A38RB	90202	
A38RBP	90202	
A40RB	90012	
A40RBP	90012	
A40SRB	99595	
A40SRBP	99595	
A45BB	92512-3	
A45BBP	92512	
A45CB	67010	
A45CBP	67010	
A45GB	91740-3	
A45GBP	91740	
A45PB	67000-3	
A45PBP	67000	
A45PMB	66861	
A45PMBP	66861	
A45PS	67000	
A45SBP	43253-3	
A46PB	67050-3	
A46PBP	67050-3	
A46PS	67050-5	
A47PB	67090	
A47PBP	67090	
A47PS	67090-5	
A49PB	67014	
A49PBP	67014	
A54GBP	92120	
A54GKP	94100	
A55GBP	91410	
A56GBP	92070	
A57GBP	91400	
A57GKP	94010	

© 2019 All Rights Reserved, Grote® Industries, Inc.

OPTRONICS®-TO-GROTE® INTERCHANGE

Optronics® PN	Grote® Form, Fit & Function	Grote® Fit & Function
A58GB	91880	
A60RBP	91302	
A66PBP	43850	
A68AB	90153	
A68ABP	90153	
A68P		66981
A68RB	90152	
A68RBP	90152	
A70GBP	92420	
A78CB	42153	
A81AB	90923	
A81ABP	90923	
A81RB	90922	
A81RBP	90922	
A8R	92792	
A8RB	92792	
A8RBP	92792	
A91ABP	46413	
A91GB	91380	
A91GBP	91380	
A91LW		67120
A91LWP		67120
A91OB	94233	
A91OBP	92433	
A91RB	46412	
A91RBP	46412	
A93PB	69710	
A93PBP	69710	
A9R	91112	
A9RB	91112	
A9RBP	91112	
A9TB	91112	
AL12GLPB	43962	
AL12GLPBP	43962	
AL45PWTB	66860	
AL45PWTBP	66860	
AL90AS	G1903-5	
AL90RBP	47082	
AL91RBP	47082	
BK42CB	43673	
BK42CBP	43673	
BK45BBP	43572	
BK53BB		93760
BK53BBP		93760
BK557GB	42180	
BK557GBP	42180	
BK55BB	43512	
BK55BBP	43512	
BK57BB		93750
BK57BBP		93750
BK66DB	43230	
BK66DBP	43230	
BK70BBP	43362-3	
BU31CB	62291	
BU31CBP	62291	
BU33CBP	62381	
BU44CB	62221	
BU44CBP	62221	
BU70CBP	62521	
BUL003CB	62091-3	
BUL003CKB		62091 + 91740
BUL06CBP	62691	
BUL10CBP	62751	
BUL11CB	62691-3	
BUL11CKB		62691 + 67090 + 91740
BUL11CKBP		62691 + 67090 + 91740
BUL11CMBP	62101	

Optronics® PN	Grote® Form, Fit & Function	Grote® Fit & Function
BUL16CBP	62691	
BUL23CB	62691-3	
BUL23CBP	62691	
BUL43CB	64971-3	
BUL43CBP	64971	
BUL53CB	62691-3	
BUL53CBP	62691	
BUL53CKB		62691 + 67090 + 91740
BUL53CKBP		62691 + 67090 + 91740
BUL69CB	60581	
BUL72CBGK		61G31 + 92420
BUL72CBGKP		61G31 + 92420
CB11AS	46543-5	
CB11WAB	46543	
CB11WABP		46543
CBL22ABP	G5053	
HLL78LS	94421-5	
HLL79HS	94411-5	
HLL90HLBP	90941-5	
HLL93HLS	90941-5	
IL21CS	61491-5	
IL31CS	61091	
IL91CBP		61821
ILL08COBP	61291	
ILL10CCB	61291-3	
ILL10CCBP	61291-3	
ILL28CMB	61H91-3	
ILL28CMBP	61H91	
ILL28CMPG	61F61-3	
ILL28CMPGP	61F61	
ILL31CB	61871	
ILL32CBP	61861	
ILL35CB	61871	
ILL71CB	61E81	
LP11CS	60101-5	
LP21CB	60151	
LP21CBP	60151	
LP21CS	60151-5	
LP25SB	43962	
LP25SBP	43962	
LP25SGGBP	43960	
LP26SKB	60460	
LP26SKBP	60460	
LP31CS	61501-5	
LP56CBP	60001	
LP5SB		43272
LP5SBP		43272
LP65CB	60291-3	
LP65CBP	60291	
LP91CBP	60261	
LPL26SKB	60681	
LPL26SKBP	60681	
LPL31CB	G6151	
LPL31CBP	G6151	
LPL31CEZB	G6151	
LPL31CEZBP	G6151	
LPL42CBF	60381-3	
LPL42CBFP	60381	
MC11AB		46883
MC11ABP		46883
MC11RB		46882
MC11RBP		46882
MC21RS	45022	
MC22AB	45023	
MC22ABP	45023	
MC22RB	45022	
MC22RBP	45022	
MC25AB	47103	
MC25ABP	47103	
MC25RB	47102	

Optronics® PN	Grote® Form, Fit & Function	Grote® Fit & Function
MC25RBP	47102	
MC27AB	45323	
MC27ABP	45323	
MC27RB	45322	
MC27RBP	45322	
MC31AB		45933
MC31ABP		45933
MC31RB		45932
MC31RBP		45932
MC35AB	46393	
MC35ABP	46393	
MC36ABP	46983-5	
MC36RB	46982-5	
MC36RBP	46982-5	
MC37ABP	46983-5	
MC38AB	45933	
MC38ABP	45933	
MC38RB	45932	
MC38RBP	45932	
MC42AB	46793-3	
MC42ABP	46793	
MC42RB	46792-3	
MC42RBP	46792	
MC42RS	91962	
MC53AB	45823-3	
MC53ABP	45823	
MC53ABSB	78333-3	
MC53ABSBP	78333	
MC53RBP	45822	
MC55ABKP	45043	
MC55ABP	45813	
MC55RB	45812-3	
MC55RBKP	45042	
MC55RBP	45812	
MC57AB	45833-3	
MC57ABP	45833	
MC57RB	45832-3	
MC57RBP	45832	
MC58AS	45413	
MC58RS	45412	
MC65AB	46743-3	
MC65ABP	46743	
MC65ARBP	46740	
MC65RB	46742-3	
MC65RBP	46742	
MC67AB		45093
MC67ABP		45093
MC67RB		45092
MC67RBP		45092
MC68AB	45253-3	
MC68ABP	45253	
MC68AS	45253-5	
MC68RBP	45252	
MC68RS	45253-5	
MC71AS		47053
MC71RS		47052
MC77RB		49062
MC77RBP		49062
MC81AB	46283-3	
MC81ABP	46283	
MC81RB	46282-3	
MC81RBP	46282	
MC82AB	45173	
MC82ABP	45173	
MC82RB	45172	
MC82RBP	45172	
MC90AS	46413-5	
MC90RS	46412-5	
MC93RB	49172-3	
MC93RBP	49172	
MC99RB	49112	
MC99RBP	49112	

 © 2019 All Rights Reserved, Grote® Industries, Inc.

OPTRONICS®-TO-GROTE® INTERCHANGE

Optronics® PN	Grote® Form, Fit & Function	Grote® Fit & Function
MC99RK	49112-5	
MCC55ABP	45813-3	
MCL111AKPG	49333-3	
MCL111AKPGP	49333	
MCL111RKPG	49332-3	
MCL111RKPGP	49332	
MCL11AHPG	49333-3	
MCL11RHPG	49332-3	
MCL12RKPG	49322-3	
MCL155ABP	47113	
MCL155RBP	47112	
MCL157ABP	47123	
MCL165ABP	47093	
MCL165RBP	47092	
MCL21ABP	G3093	
MCL21RBP	G3092	
MCL23ABP	G1083	
MCL23RBP	G1082	
MCL299AB	45283	
MCL299RB	45282	
MCL45ABP	G4603	
MCL46ABP	G4603	
MCL46RBP	G4602	
MCL505ABSB		78433 + 43152
MCL505GABSB		78433 + 92120
MCL50AB	G3003-3	
MCL50ABP	G3003	
MCL50RB	G3002-3	
MCL50RBP	G3002	
MCL51AB	47123-3	
MCL51ABP	47123	
MCL51RB	47122-3	
MCL51RBP	47122	
MCL527AFB		47123 + 43162
MCL527AS	G1033-5	
MCL527RB	47122-3	
MCL527RBP	47122	
MCL527RFB		47122 + 43162
MCL527RS	G1032-5	
MCL54AB	46133	
MCL54ABP	46133	
MCL54RB	46132	
MCL54RBP	46132	
MCL55AB	47113-3	
MCL55ABP	47113	
MCL55AKB		G3003 + 67050 + 92120
MCL55FRB	43532	
MCL55RB	47112-3	
MCL55RBP	47112	
MCL55RKB		G3002 + 67050 + 92120
MCL56AB	47113-3	
MCL56ABP	47113	
MCL56AFB		47113 + 43152
MCL56AS	G3003-5	
MCL56RB	47112-3	
MCL56RBP	47112	
MCL56RFB		47122 + 43152
MCL56RS	G3002-5	
MCL57AB	47123-3	
MCL57ABP	47123	
MCL57RB	47122-3	
MCL57RBP	47122	
MCL57RCB	G1042	
MCL57RCBP	G1042	
MCL58AB	46143-3	
MCL58ABP	46143	
MCL58RB	46142-3	
MCL58RBP	46142	

Optronics® PN	Grote® Form, Fit & Function	Grote® Fit & Function
MCL59ABP	G1003	
MCL59RBP	G1002	
MCL61ABP	G1903	
MCL61AS	G1903-5	
MCL61RB	G1902-3	
MCL61RBP	G1902	
MCL63ABP	G1903	
MCL63RB	G1902-3	
MCL63RBP	G1902	
MCL65AB	G1903-3	
MCL65ABP	G1903	
MCL65RB	G1902-3	
MCL65RBP	G1902	
MCL66AB	47243-3	
MCL66ABP	47243	
MCL66RB	47242-3	
MCL66RBP	47242	
MCL67RB		G1902 + 43790
MCL67RBP		G1902 + 43790
MCL75AB	G1903-3	
MCL75ABP	G1903	
MCL75RBP	G1902	
MCL76AB	G2103-3	
MCL76ABP	G2103	
MCL76RB	G2102-3	
MCL76RBP	G2102	
RB10A		76033
RB15RBP	40132	
RE10AB	40303	
RE10ABP	40303	
RE10RB	40302	
RE10RBP	40302	
RE11AB	41033-3	
RE11ABP	41033	
RE11RB	41032-3	
RE11RBP	41032	
RE12AK		41033
RE12RK		41032
RE15AB	40133	
RE15ABP	40133	
RE15AK		40133-5
RE15RB	40132	
RE15RK		40132-5
RE18T		40650-5
RE2018T	40650-5	
RE21AB	40053	
RE21ABP	40053	
RE21AS	40053	
RE21RB	40052-3	
RE21RBP	40052	
RE21RS	40052-5	
RE31AS	40233-5	
RE31RS	40232-5	
RE35AB	41013	
RE35ABP	41013	
RE35RB	41012	
RE35RBP	41012	
RE37AB	41003	
RE37ABP	41003	
RE37RB	41002	
RE37RBP	41002	
RE418T		40650-5
RT150WBDP	40641	
RT150Y2BP	41133	
RTR03150711CBP	40650	
RTR1015066CB		41050
RTR1015066CBP	41050	
RTR10150711CBP	40650	
RTR10150WBP	40641	
RTR15066B	41050	
RTR15066BP	41050	
RTR150711B	41160-3	
RTR150711BP	41160	

Optronics® PN	Grote® Form, Fit & Function	Grote® Fit & Function
RTR150711PBP	41160	
RVSL21	61793	
RVSL21P	61793	
ST16RB	52482	
ST17RB	52492	
ST24RBP	50862	
ST25RBP	50852	
ST2RB	52442	
ST2RBP	52442	
ST31RB	53132	
ST31RBP	53132	
ST33AB	52203	
ST33ABP	52203	
ST33RBP	52202	
ST3RB	52452	
ST40RB	50232	
ST40RBP	50232	
ST40RS	50232-5	
ST44AB		52923 + 91740 + 67090
ST44RBP	53012	
ST45RGB	53102-3	
ST45RGBP	53102	
ST45RK	53012-5	
ST45RS	52922-5	
ST46RB	52672-3	
ST46RBP	52672	
ST46RKB	52682	
ST46RKBP	52682	
ST4RB	51932	
ST4RBP	51932	
ST52AAP	55223	
ST52RA	55220	
ST52RB	50630	
ST52RBP	50630	
ST56RS	53812	
ST57RS	53822	
ST5RB	51942	
ST5RBP	51942	
ST70ABP	52183	
ST70RB	52892-3	
ST70RBP	52892	
ST70RS	52182-5	
ST74AB	53093	
ST74ABP	53093	
ST74RBP	53092	
ST75ABP	52513	
ST77AB	52253	
ST77ABP	52253	
ST7RBP	53672	
ST8RBP	52302	
ST90RBP	50132	
ST9RBP	52312	
ST9RS	52312-5	
STL002RFB		54172 + 42152
STL003AB	54333	
STL003RFB	54482	
STL003RK		54332 + 66815
STL003RMBP	54362	
STL003SRFLB		52922 + 92512
STL008RB	51982	
STL008RBP	51982	
STL008RPG	51982	
STL008RS	51982-5	
STL009RB	51992	
STL009RPG	51992	
STL009RS	51992-5	
STL101ABP	G4003	
STL101RMBP	53552	
STL12RMBP	54142	
STL13K		54342 + 67090 + 91740
STL13RB	54342-3	

© 2019 All Rights Reserved, Grote® Industries, Inc.

OPTRONICS®-TO-GROTE® INTERCHANGE

Optronics® PN	Grote® Form, Fit & Function	Grote® Fit & Function
STL13RBP	54342	
STL13RGBP	53252	
STL13RMB	53552-3	
STL13RMBP	53552	
STL153ARDBBP	G5530	
STL190RBP	53422	
STL201RFMB		55162 + 92512
STL22AB	G6003-3	
STL22ABP	G6003	
STL22RB	G6002-3	
STL22RBP	G6002	
STL22RCBP	G6012	
STL23ABP	G4003	
STL23RB	G4002-3	
STL23RBP	G4002	
STL28RBP	51982	
STL29RBP	51992	
STL33RB	G4502	
STL33RBP	G4502	
STL34RB		52202 + 94180 + 67090
STL35AB	G4503	
STL35RBP	G4502	
STL412RB	54172-3	
STL412RBP	54172	
STL413RB	54342-3	
STL413RBP	54342	
STL413RMB	54362-3	
STL413RMBP	54362	
STL42RMBP	53292	
STL43RB	54342-3	
STL43RBP	54342	
STL43RMB	53252-3	
STL43RMBP	53252	
STL52ARBP	G5300	
STL543AB	G4003-3	
STL543ABP	G4003	
STL543RB	G4002-3	
STL543RBP	G4002	
STL55ABP	G4003	
STL55RB	G4002-3	
STL55RBP	G4002	
STL55RMB	53312-3	
STL55RMBP	54562	
STL572AB	G6003-3	
STL572ABP	G6003	
STL572RB	G6002-3	
STL572RBP	G6002	
STL60RB	G5082	
STL60RBP	G5082-5	
STL6RS	51982-5	
STL70AB	G6003-3	
STL70ABP	G6003	
STL70RB	G6002-3	
STL70RBP	G6002	
STL71AMB	54193-3	
STL71AMBP	54193	
STL72AB	G6003	
STL72ABP	G6003	
STL72RB	G6002-3	
STL72RBP	G6002	
STL72RMB	53962-3	
STL72RMBP	53962	
STL74RBK		G6002 + 67090 + 92420
STL74RBKP		G6002 + 67090 + 92420
STL75AMBP	54213	
STL7RS	51992-5	
STL8RB	51982	

Optronics® PN	Grote® Form, Fit & Function	Grote® Fit & Function
STL90ABP	55993	
STL90RB	55992	
STL90RBP	55992	
STL9RB	51992	
TL10CB	64931	
TL10CBP	64931	
TL10CS	64931-5	
TL15RK	65300-5	
TL27BK	65370-5	
TL29BK	65370-5	
TL5RK	65230-5	
TL6K	65440-5	
TLL22RK		G6002 + 67090 + 92420
TLL45FBP	63861	
TLL46CFB	BZ201-5	
TLL46CFBP	BZ201-5	
TLL48FBP	BZ201-5	
TLL52FB	BZ601-5	
TLL52FBP	BZ601-5	
TLL54TB	63991	
TLL54TBP	63991	
TLL55FB	63991	
TLL55FBP	63991	
TLL60FBP	BZ301-5	
TLL64FB	63F51	
TLL70FB	63L71	
TLL71FB	63991	
TLL71FBP	63991	
TLL9RK	65320-5	
UCL178RFP2B		61G31 + 42152
UCL21CS	64J11	
UCL55CBP	60561	
UCL65CBP	60411	
UL53CB	45821	
UL53CBP	45821	
UL95CB	60271	
UL95CBP	60271	
ULL22CB	64J31	

AUTOMANN®-TO-GROTE® INTERCHANGE

Automann® PN	Grote® Form, Fit & Function	Grote® Fit & Function
564.46059	54233	
564.46068	47063	
577.4601	48522	
571.LD27A16	45583	
571.LD27R16	45582	
571.LG162LB	60081	
571.PT116	67001	

COLE HERSEE®-TO-GROTE® INTERCHANGE

Cole Hersee® PN	Grote® Form, Fit & Function	Grote® Fit & Function
2560	68170	
DL-75-12V	60101	

ECCO®-TO-GROTE® INTERCHANGE

ECCO® PN	Grote® Form, Fit & Function	Grote® Fit & Function
520	73040	
530		73090
575		73090
585		73040
777		73080
3510A		78143
3715A		78143
3730A		78163
3730C		78161
3735A		78163
3735C		78161
3811A		78193 + 98480
5315A	78513	
5545A	77223	
5580CA		76943
5580CA-VM		76953
5590CAC-VM		76990
5590CA-VM		76943
5810A		78123
6225A		78113
6260A	78113	
630N		73250
6410A	78093	
6410A-MG	78103	
6465A	78093	
6550A		78853
6550A-VM		78863
6550C		78851
6570A		78063
6570A-VM		78863
6650A		78853
6670A		78063
6670A-VM		78863
6710A		78853
7160A		78033
7460A		78033
7945A		78853
7945A-VM		78863
7960A		78053
7965A		78033
7965A-VM		78043
7970A		78053
7970A-VM		78053
850N		73070
9014A		77933
9014C		77931
A3730DCK		98360
A3932BZC		98480
A6050BG		98470
EB7180A		78033
EB7185CAC		78071
ED0002C		78161
ED0002R		78162
ED0003C		78161
ED0004A		78163
ED0004C		78161
ED0004R		78162
ED3702AC		78460
ED3766AC		78460
R5812BH	90620	
R6501FT	92970	
SA901		73240
SA950		73110
SA955		73220
SW15	44421	

 © 2019 All Rights Reserved, Grote® Industries, Inc.

NAPA® WIRE-TO-GROTE® INTERCHANGE

Napa® Wire PN	Grote® Form, Fit & Function	Grote® Fit & Function
787107	68110	
787125	68080	

PAI WIRE-TO-GROTE® INTERCHANGE

PAI PN	Grote® Form, Fit & Function	Grote® Fit & Function
4197		90303 + 45993
4261	48542	
4263	53052	
4274	45333	
4286	50992	
4287	61031	
4292	46813	
4294		91302
4295	92183	
4298	91583	
4304	61821	
4307	45413	
4997	48402	
5278		G5543-5
5279	G5543-5	
5289	46813	
5313	G4002	

PHILLIPS®-TO-GROTE® INTERCHANGE

Phillips® PN	Grote® Form, Fit & Function	Grote® Fit & Function
22-4321	87110	
22-4621	87111	
22-9621	87023	
24-4321	87110	
24-4621	87111	
30-2051	87171	
30-2071	87172	
30-4321	87100	
30-4621	87101	
30-4920	87170	
30-4921	87170	
30-9620	87101	
30-9624	87101	

TRAMEC SLOAN®-TO-GROTE® INTERCHANGE

TRAMEC SLOAN® PN	Grote® Form, Fit & Function	Grote® Fit & Function
421007	87020	
421010	87110	
421113	87111	
421115	87023	
421129	87100	
421130	87101	
421166	87171	
421167	87172	
421200	87172	
421202	87171	

VELVAC®-TO-GROTE® INTERCHANGE

VELVAC® PN	Grote® Form, Fit & Function	Grote® Fit & Function
590154	87020	
590155	87023	
590156	87110	
590157	87111	
590159	87180	
590160	87100	
590161	87101	
590163	87170	
590165	87171	
590166	87172	
590178	87182	

VSM®-TO-GROTE® INTERCHANGE

VSM® PN	Grote® Form, Fit & Function	Grote® Fit & Function
254	44710	
262	44530	
1010	45812	
1011	45832	
1013	49142	
1015	G1032	
1030	45822	
1035	G3002	
1211	46792	
1500	46412	
1505	G1502	
1900	46742	
1905	G1902	
3305	49332	
4054	53012	
4064	52922	
4440	53552	
4454	G4012	
4464	G4002	
5016	53722	
6054	53092	
6064	52182	
6440	54142	
6454	G6002	
6464	G6002	
7562	90941-5	
9093	91572	
9119	91400	
9122	67050	
9124	67000	
9127	91740	
9128	67090	
9139	92120	
9238	43572	
9375	92583	
9389	43850	
9470	68680	
9526	92420	
44544	G4002	
44644	G4002	
1010A	45813	
1010AD	45813	
1010AK	45043	
1010D	45812	
1010K	45042	
1010KD	45042	
1011A	45833	
1011AD	45833	
1011AK	45073	
1011AKD	45073	
1011D	45832	

VSM® PN	Grote® Form, Fit & Function	Grote® Fit & Function
1011K	45832	
1011KD	45072	
1015A	G1033	
1015AC	G1003	
1015AD	47123	
1015AK	G1033	
1015AKD	47473	
1015D	47122	
1015K	G1032	
1015KD	47472	
1015RC	G1042	
1030A	45823	
1030AD	45823	
1030D	45822	
1035A	G3003	
1035AD	47113	
1035AK	G3003	
1035AKD		47113 + 94100
1035K	G3002	
1035KD		47112 + 94100
1255AX	G4603	
1255X	G4602	
1375A	46813	
1376A	47183	
1500A	46413	
1500AD	45163	
1500D	45162	
1500W	60271	
1505A	G1503	
1505D	47082	
1505W	60421	
1505WD	60671	
1900A	46743	
1900AD	46742	
1900W	60301	
1905A	G1903	
1905D	47092	
2102A	46073	
2105AK	G2103	
2105AKD	49393	
2105K	G2102	
2105KD	49392	
3305A	49333	
3305AD	49323	
3305D	49322	
3305G	60824	
3305W	60651	
3305WD	60721	
3812LE	G5300	
3812LED	G5300	
4054A	52923	
4054AD		52923 + 91740 + 67090
4054C	62171	
4054CD	62221	
4054D	53012	
4064A	52923	
4064AD	52923	
4064D	52922	
4064W	62171	
4064WD	62211	
420W	60001	
44544A	G4003	
44544D	G4012	
4454A	G4012	
4454D	53462	
44644A		G4003 + 91740 + 67090
44644RC	G4022	
4464A	G4003	
4464AD	53253	
4464D	53252	
4464R	G4022	

© 2019 All Rights Reserved, Grote® Industries, Inc.

VSM®-TO-GROTE® INTERCHANGE

VSM® PN	Grote® Form, Fit & Function	Grote® Fit & Function
4464W	62691	
4464WD	64971	
5016LED	G5092	
6054A	53093	
6054C	62231	
6054CD	62251	
6054D	52572	
6064A	52183	
6064AD	52893	
6064W	62231	
6064WD	62231	
6154A	52253	
6154AD	52892	
6164A	52193	
620W	64931	
6454A	G6003	
6454AD	53123	
6454D	53122	
64644AC	G6013	
64644RC	G6012	
6464A	G6003	
6464AD	53963	
6464D	53962	
6464W	62751	
6464WD	62751	
6554A	54193	
6564A	54193	
7562D	90941-5	
9119D	91400	
9124D	67000	
9127D	91740	
9128D	66843	
9139D	92120	
1255	G4602	
4469		53532 + 52513
1255A	G4603	
3005RC		45772

Ford® is a registered trademark of Ford Motor Company CORPORATION DELAWARE; Kenworth® is a registered trademark of PACCAR, Inc.; Freightliner® is a registered trademark of Daimler Trucks North America, LLC; Navistar® is a registered trademark of Navistar International Corporation; Fontaine® is a registered trademark of Fontaine Truck Equipment Company; GM® is a registered trademark of General Motors LLC; Jeep® is a registered trademark of FCS US LLC; Peterbilt® is a registered trademark of PACCAR Inc DBA Peterbilt Motors Company; Chevrolet® is a registered trademark of General Motors LLC; Wrangler® is a registered trademark of FCS US LLC; GMC® is a registered trademark of General Motors LLC; Dodge® is a registered trademark of FCA US LLC; Fiat® is a registered trademark of FCA Marketing Group S.P.A.; Deutsch® is a registered trademark of TE Connectivity Corporation; Smart Alarm® is a registered trademark of Electronic Controls Company; Ray-Ban® is a registered trademark of Luxottica Group S.P.A.; Polaris® is a registered trademark of Polaris Industries; Honda® is a registered trademark of Honda Motor Company, Ltd.; Acura® is a registered trademark of Honda Motor Company, Ltd.; AMC® is a registered trademark of FCA US LLC; BMW® is a registered trademark of Bayerische Motoren Worke Aktiengesellschaft; Buick® is a registered trademark of General Motors LLC; Cadillac® is a registered trademark of General Motors LLC; Chevrolet/GMC® is a registered trademark of General Motors LLC; Chrysler® is a registered trademark of FCA US LLC; Daihatsu® is a registered trademark of Daihatsu Motor Co. Ltd.; Hyundai® is a registered trademark of Hyundai Motor Company; Kubota® is a registered trademark of Kubota Tractor Corporation; Kawasaki® is a registered trademark of Kawasaki Motors Corporation; John Deere® is a registered trademark of Deere & Company. S-Link™ is a Trademark of Star1889 Headlight & Lantern Co. Truck-Lite® is a registered trademark of TRUCK-LITE CO., LLC; Packard® is a registered trademark of DELPHI TECHNOLOGIES, INC.; Hyundia® is a registered trademark of HYUNDAI MOTOR COMPANY.; Infiniti® is a registered trademark of NISSAN JIDOSHA KABUSHIKI KAISHA.; International® is a registered trademark of International Truck Intellectual Property. Isuzu® is a registered trademark of ISUZU JIDOSHA KABUSHIKI KAISHA. Jaguar® is a registered trademark of JAGUAR LAND ROVER LIMITED. Lincoln® is a registered trademark of FORD MOTOR COMPANY. Mazda® is a registered trademark of MAZDA MOTOR CORPORATION. Mitsubishi® is a registered trademark of MITSUBISHI JUKOGYO KABUSHIKI KAISHA. Mercury® is a registered trademark of FORD MOTOR COMPANY. Nissan® is a registered trademark of NISSAN JIDOSHA KABUSHIKI KAISHA.; Plymouth® is a registered trademark of FCA US LLC.; Pontiac® is a registered trademark of GENERAL MOTORS LLC.; Porsche® is a registered trademark of Dr. Ing. h.c. F. Porsche Aktiengesellschaft.; Renault® is a registered trademark of RENAULT s.a.s.; SAAB® is a registered trademark of SAAB AB.; Subaru® is a registered trademark of FUJI JUKOGYO KABUSHIKI KAISHA.; Suzuk® is a registered trademark of SUZUKI MOTOR CORPORATION.; Toyota® is a registered trademark of Toyota Jidosha Kabushiki Kaisha.; Yugo® is a registered trademark of OTP LLC.; Signal-Stat®is a registered trademark of TRUCK-LITE CO., LLC; Paccar® is a registered trademark of PACCAR Inc; Peterson® is a registered trademark of Peterson Manufacturing Company; Primatronics® is a registered trademark of Fleetpride, Inc.; Maxxima® is a registered trademark of PANOR CORP.; Optronics® is a registered trademark of Optronics International, LLC: VSM® is a registered trademark of VEHICLE SAFETY MANUFACTURING, LLC; Tramec Sloan® is a registered trademark of Tramec Sloan, LLC; Cole Hersee® is a registered trademark of COLE-HERSEE COMPANY; Napa® is a registered trademark of NATIONAL AUTOMOTIVE PARTS ASSOCIATION; Ecco is a registered trademark of ELECTRONIC CONTROLS COMPANY; Peugeot® is a registered trademark of AUTOMOBILES PEUGEOT société anonyme sa; Phillips® is a registered trademark of R.A. PHILLIPS INDUSTRIES, INC.; Velvac® is a registered trademark of VELVAC Inc.; 3M® is a registered trademark of 3M Company; Valox® is a registered trademark of SABIC INNOVATIVE PLASTICS IP B.V.; Tyco® is a registered trademark of Tyco Internation Services GmbH LIMITED LIABILITY COMPANY SWITZERLAND; Metri-Pack® is a registered trademark of Aptiv Technologies Limited COMPANY BARBADOS; Scan-Lock™ is a trademark of Whelen Engineering; Sterling®; Mack®; Volvo®; Freuhauf®; Scan-Lock®; Eagle®; Triumph®.

All product and company names are trademarks™ or registered® trademarks of their respective holders. Use of them does not imply any affiliation with or endorsement by them.

 © 2019 All Rights Reserved, Grote® Industries, Inc.

VISIT GROTE.COM TO GET THE MOST UP-TO-DATE PRODUCT INFORMATION

Whether you prefer desktop, tablet, or mobile, ***GROTE.COM*** puts all the Grote® lighting and electrical accessory information at your fingertips, wherever you may be.

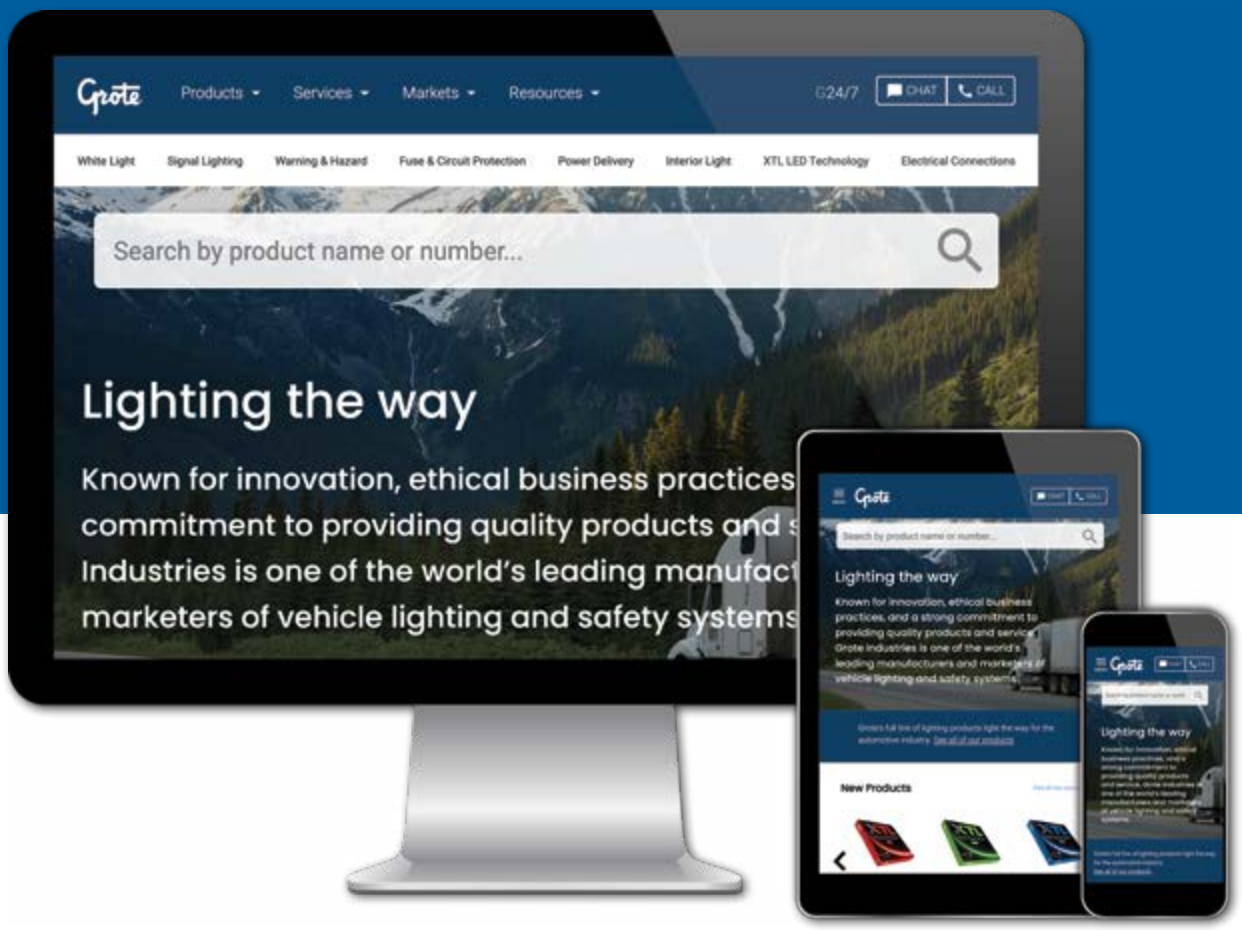

GROTE.COM –THE ULTIMATE REFERENCE!

- ***HIGH-RESOLUTION IMAGERY***
- ***UP-TO-DATE STATS AND INFORMATION***
- ***UNIQUE 360° VIEWS OF MANY PRODUCTS***
- ***LATEST PRODUCT RELEASES***

Grote

© 2019 All Rights Reserved, Grote® Industries, Inc.

IMPORTANT NOTE: Every lamp, reflex reflector, and conspicuity treatment must be permanently attached in the location specified below and must comply with all applicable requirements prescribed for it by FMVSS/CMVSS 108. The face of any device on the front/rear and sides should be, respectively perpendicular and parallel to the vehicle's centerline, unless it is photometrically certified at installation angle. No part of the vehicle shall prevent any device from meeting its prescribed requirements unless an auxiliary device meeting all prescribed requirements is installed.

IN CANADA: Manufacturers and importers of vehicles must have the proper certification test records demonstrating compliance of lighting components with all prescribed requirements.

BASIC EQUIPMENT REQUIRED ON ALL TRAILERS

DESCRIPTION				MANDATORY REQUIREMENTS			
Area	Equipment	SAE Lens Coding	Functional Purpose	Quantity	Color	Location	Height mm(in.) from the ground
1	Tail Lamps	(T)	Indicate vehicle's presence and width	Minimum 2	Red	On the rear - symmetrical as far apart as practicable	380-1830 (15-72)
	Stop Lamps	(S)	Indicate braking	Minimum 2	Red	On the rear - symmetrical as far apart as practicable	380-1830 (15-72)
	Rear Turn Signal Lamps	(I)	Indicate direction of turn	Minimum 2	Red or Amber	On the rear - symmetrical as far apart as practicable	380-2110 (15-83)
	Rear Reflex Reflectors	(A)	Indicate vehicle's presence and width	Minimum 2	Red	On the rear - symmetrical as far apart as practicable facing rearward	380-1530 (15-60)
2	License Plate Lamp(s)	(L)	Illuminates license plate	Minimum 1	White	On the rear - above or at the sides of license plate	No requirement
3	Rear Side Marker Lamps *photometrically certified at installation angle	(P2, PC* or) P3, PC2*)	Front and rear side marker lamps / side reflex reflectors indicate vehicle's presence and length	Minimum 2	Red	Each side at rear as far back as practicable	380-1530 (15-60) no max. for veh. under 2032mm (80") wide
	Rear Side Reflex Reflectors	(A)		Minimum 2	Red	Each side at rear as far back as practicable facing sideward	380-1530 (15-60)
4 a	Front Side Marker Lamps *photometrically certified at installation angle	(P2, PC* or P3, PC2*)		Minimum 2	Amber	Each side at front as far forward as practicable	380 (15) minimum
4 b	Front Side Reflex Reflectors	(A)		Minimum 2	Amber	Each side at front as far forward as practicable facing sideward	380-1530 (15-60)

ADDITIONAL EQUIPMENT FOR TRAILERS EXCEEDING THE FOLLOWING PARAMETERS

Length 9.1m (30 ft.) or longer

DESCRIPTION				MANDATORY REQUIREMENTS			
Area	Equipment	SAE Lens Coding	Functional Purpose	Quantity	Color	Location	Height mm(in.) from the ground
5 a	Intermediate Side Marker Lamps *photometrically certified at installation angle	(P2, P3, PC* or PC2*)	Indicate presence of a long vehicle	Minimum 2	Amber	Each side near center facing sideward	380 (15) minimum
5 b	Intermediate Side Reflex Reflectors	(A)	Indicate presence of a long vehicle	Minimum 2	Amber	Each side near center facing sideward	380-1530 (15-60)

Width 2032mm (80 in.) or wider

DESCRIPTION			MANDATORY REQUIREMENTS				
Area	Equipment	SAE Lens Coding	Functional Purpose	Quantity	Color	Location	Height
6	Rear Clearance Lamps *photometrically certified at installation angle	(P2, PC* or P3, PC2*)	Show vehicle's width MAY NOT be combined with tail lamps	Minimum 2	Red	At widest point - symmetrical on the rear or near the rear facing rearward	As high as practicable may be lower only if ID lamps are at the top
7	Rear Identification (ID) Lamps	(P2 or P3)	Indicate presence of a wide vehicle	Exactly 3	Red	On the rear - center horizontally spaced 150mm (6 in.) to 300mm (12 in.) apart facing rearward	At the top - may be lower if door header narrower than 25mm
8	Front Clearance Lamps *photometrically certified at installation angle	(P2, PC* or P3, PC2*)	Show vehicle's width	Minimum 2	Amber	At widest point - symmetrical on the front or near the front facing forward	As high as practicable

Width 2032mm (80 in.) or wider AND GVWR 4536 kg (10,000 lb.) or more

DESCRIPTION		MANDATORY REQUIREMENTS					
Area	Conspicuity Treatment	DOT Coding	Quantity	Color	Location	Height	Options
9	Rear Upper Body Markings	DOT-C DOT-C2 DOT-C3 DOT-C4	Exactly 2 pairs of 300mm long strips	White	On the rear upper corners facing rearward	At the top	Reflex reflectors may not be required if they are replaced in their required location with conspicuity treatment. **Optional in Canada:** Rear lower body and side conspicuity treatment may also be solid white, solid yellow, or white and yellow.
10	Bumper Bar Marking		Continuous	Red/White	On the rear bumper bar's horizontal element full width - facing rearward	No requirement	
11	Rear Lower Body Marking		Continuous	Red/White *(see options)*	On the rear full width of the vehicle facing rearward	As horizontal as practicable and as close as practicable to the range of 375 to 1525mm from the ground	
12	Side Marking		(see location)	Red/White *(see options)*	Each side - facing sideward continuous, or evenly spaced over minimum of 50% of length starts and ends as close to the front and rear of the vehicle as practicable	As horizontal as practicable and as close as practicable to the range of 375 to 1525mm from the ground	

NOTE: The edge of red conspicuity tape shall not be closer than 75 mm to the edge of any amber lamp and the edge of white conspicuity tape shall not be closer than 75 mm to the edge of any lamp

For more information contact: Transport Canada: Motor Vehicle Safety Enforcement Branch Attention: Compliance Engineering Fax: 613-998-4831
National Highway Traffic Safety Administration: Office of Safety Performance Standards Attention: Richard Van Iderstine Fax: 202-366-4329

 © 2019 All Rights Reserved, Grote® Industries, Inc.

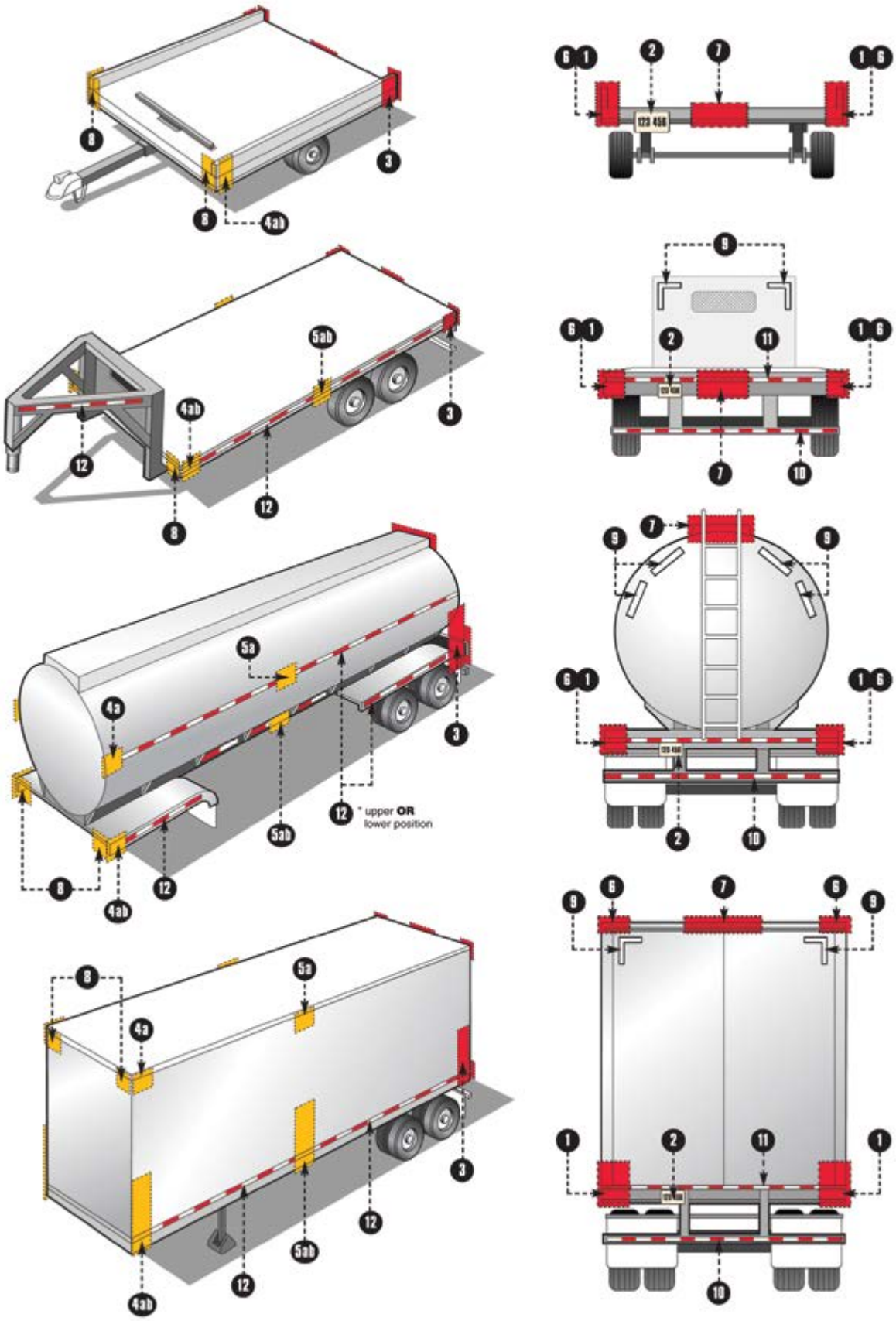

© 2019 All Rights Reserved, Grote® Industries, Inc.

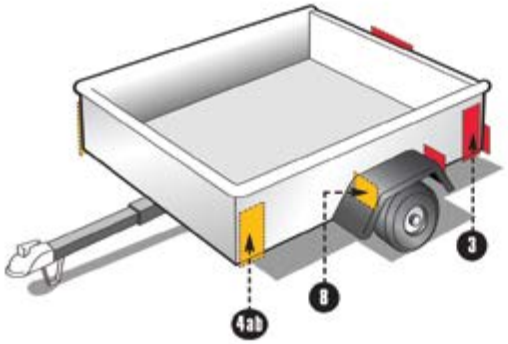

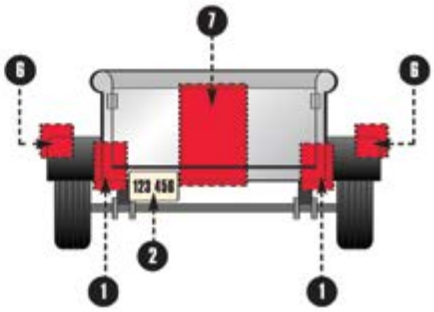

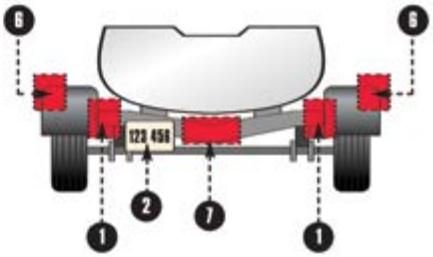

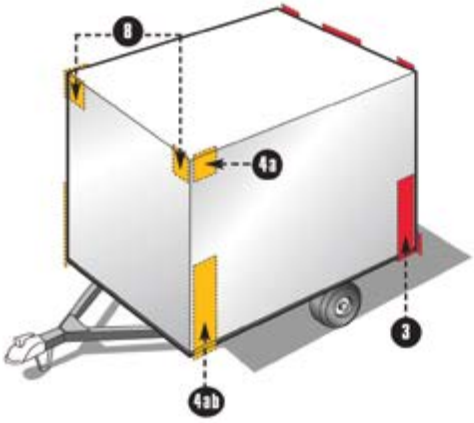

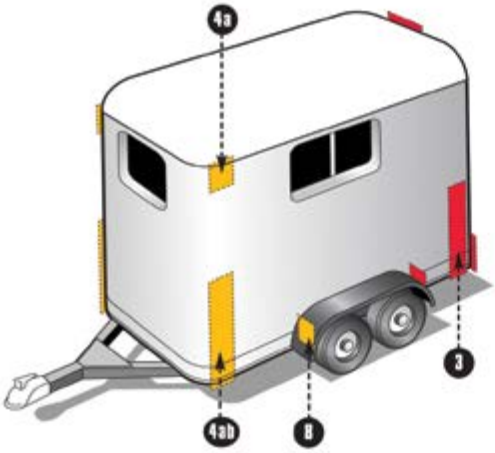

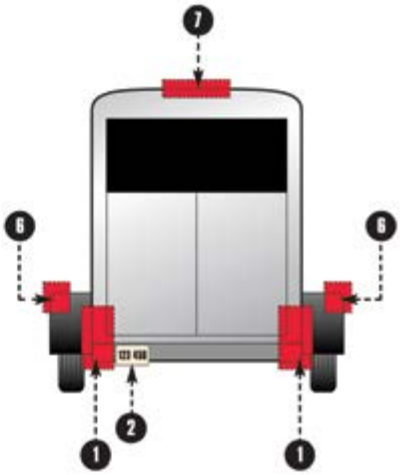

 © 2019 All Rights Reserved, Grote® Industries, Inc.

IMPORTANT NOTE: Every lamp, reflex reflector, and conspicuity treatment must be permanently attached in the location specified below and must comply with all applicable requirements prescribed for it by FMVSS/CMVSS 108. The face of any device on the front/rear and sides should be, respectively perpendicular and parallel to the vehicle's centerline, unless it is photometrically certified at installation angle. No part of the vehicle shall prevent any device from meeting its prescribed requirements unless an auxiliary device meeting all prescribed requirements is installed.

IN CANADA: Manufacturers and importers of vehicles must have the proper certification test records demonstrating compliance of lighting components with all prescribed requirements.

BASIC EQUIPMENT REQUIRED ON ALL TRUCKS, BUSES & MPVs

DESCRIPTION				MANDATORY REQUIREMENTS			
Area	Equipment	SAE Lens Coding	Functional Purpose	Quantity	Color	Location	Height mm(in.) from the ground
1	Headlamps - Lower Beam US requires "DOT" lettering on lens US&Canada - light source code required on lens	(H, HR)	Forward road illumination	Minimum 2	White	On the front - symmetrical as far apart as practicable If 4 lamp system - outboard or above upper beams	560-1370 (22-54)
	Headlamps - Upper Beam US requires "DOT" lettering on lens US&Canada - light source code required on lens	(H, HR)	Forward road illumination	Minimum 2	White	On the front - symmetrical If 4 lamp system - inboard or below lower beams	560-1370 (22-54)
	Parking Lamps Vehicles less than 2032mm wide	(P)	Indicate parked vehicle	Minimum 2	White or amber	On the front - symmetrical as far apart as practicable	380-1830 (15-72)
	Daytime Running Lamps (DRL) Canada - required / US - option US requires "DRL" lettering on lens if not headlamp	(Y2)	Indicate in use vehicle	Minimum 2	White or amber	On the front - symmetrical as far apart as practicable	380 (15) min. Max. depends on type of DRL
	Front Turn Signal/ Hazard Warning Lamps	(I)	Indicate direction of turn/ identify disabled vehicle	Minimum 2	Amber	On the front- symmetrical as far apart as practicable	380-2110 (15-83)
2	Front Clearance Lamps Vehicles 2032mm wide or wider *photometrically certified at installation angle	(P2, PC* or P3, PC2*)	Show vehicle's width	Minimum 2	Amber	At widest point - symmetrical on the front or near the front facing forward	As high as practicable
3	Front Identification Lamps (ID) Vehicles 2032mm wide or wider	(P2 or P3)	Indicate presence of a wide vehicle	Exactly 3	Amber	On the front - center horizontally spaced 150 mm (6 in.) to 300 mm (12 in.) apart	As high as practicable or on top of the cab
4 a	Front Side Marker Lamps *photometrically certified at installation angle	(P2, PC* P3, PC2*)	Front and rear side marker lamps / side reflex reflectors indicate vehicle's presence and length	Minimum 2	Amber	Each side at front as far forward as practicable	380 (15) minimum
4 b	Front Side Reflex Reflectors	(A)		Minimum 2	Amber	Each side at front as far forward as practicable facing sideward	380-1530 (15-60)
5 a	Rear Side Marker Lamps ** *photometrically certified at installation angle	(P2, PC* or P3, PC2*)		Minimum 2	Red	Each side at rear as far back as practicable	380 (15) minimum
5 b	Rear Side Reflex Reflectors ** **not required on Truck Tractors	(A)		Minimum 2	Red	Each side at rear as far back as practicable facing sideward	380-1530 (15-60)
6	Rear Clearance Lamps Vehicles 2032mm wide or wider Not required on Truck Tractors *photometrically certified at installation angle	(P2, PC* or P3, PC2*)	Show vehicle's width MAY NOT be combined with tail lamps	Minimum 2	Red	At widest point - symmetrical on the rear or near the rear facing rearward	As high as practicable may be lower only if rear ID lamps are at the top
7	Rear Identification (ID) Lamps Vehicles 2032mm wide or wider Not required on Truck Tractors	(P2 or P3)	Indicate presence of a wide vehicle	Exactly 3	Red	On the rear - center horizontally spaced 150mm (6 in.) to 300mm (12 in.) apart facing rearward	At the top may be lower if door header narrower than 25mm
8	Tail Lamps	(T)	Indicate vehicle's presence and width	Minimum 2	Red	On the rear - symmetrical as far apart as practicable	380-1830 (15-72)
	Stop Lamps	(S)	Indicate braking	Minimum 2	Red	On the rear - symmetrical as far apart as practicable	380-1830 (15-72)
	Rear Turn Signal/ Hazard Warning Lamps	(I)	Indicate direction of turn/ identify disabled vehicle	Minimum 2	Red or amber	On the rear - symmetrical as far apart as practicable	380-2110 (15-83)
	Rear Reflex Reflectors	(A)	Show vehicle's presence and width	Minimum 2	Red	On the rear - symmetrical as far apart as practicable	380-1530 (15-60)
9	Backup Lamp	(R)	Illuminates ground behind the vehicle and alert road users	Minimum 1	White	Rear	No requirement
10	License Plate Lamp(s)	(L)	Illuminates license plate	Minimum 1	White	On the rear - above or at the sides of license plate	No requirement
11	Center High Mounted Stop Lamp Vehicles less than 2032mm wide and 4536kg	(U3)	Indicates braking	1	Red	On the rear - centerline of the vehicle	860 (34) minimum

ADDITIONAL EQUIPMENT FOR SPECIFIC VEHICLES
VEHICLES 9.1m (30 ft.) LONG OR LONGER

DESCRIPTION				MANDATORY REQUIREMENTS			
Area	Equipment	SAE Lens Coding	Functional Purpose	Quantity	Color	Location	Height mm(in.) from the ground
12 a	Intermediate Side Marker Lamps	(P2 or P3)	Indicate presence of a long vehicle	Minimum 2	Amber	Each side near center	380 (15) minimum
12 b	Intermediate Side Reflex Reflectors	(A)	Indicate presence of a long vehicle	Minimum 2	Amber	Each side near center facing sideward	380-1530 (15-60)

Truck Tractors

DESCRIPTION		MANDATORY REQUIREMENTS					
Area	Conspicuity Treatment	DOT Coding	Quantity	Color	Location	Height	Options
13	Rear Upper Body Markings	DOT-C DOT-C2 DOT-C3 DOT-C4	Exactly 2 pairs of 300mm long strips	White	Rear upper corners of cab facing rearward	As high as practicable excluding fairings	
14	Rear Marking		Exactly 2 sections of min. 600mm each	Red/ White	Rear - facing rearward - on fenders, on mud flap brackets, or within 300mm below the top of mud flaps	As horizontal as practicable and not higher than 1525mm from the ground	If mud flaps not used - on the cab or frame mounted brackets

NOTE: The edge of red conspicuity tape shall not be closer than 75 mm to the edge of any amber lamp and the edge of white conspicuity tape shall not be closer than 75 mm to the edge of any lamp

For more information contact:

National Highway Traffic Safety Administration: Office of Safety Performance Standards — Attention: Richard Van Iderstine — Fax: 202-366-4329
Transport Canada: Motor Vehicle Safety Enforcement Branch — Attention: Compliance Engineering — Fax: 613-998-4831

© 2019 All Rights Reserved, Grote® Industries, Inc.

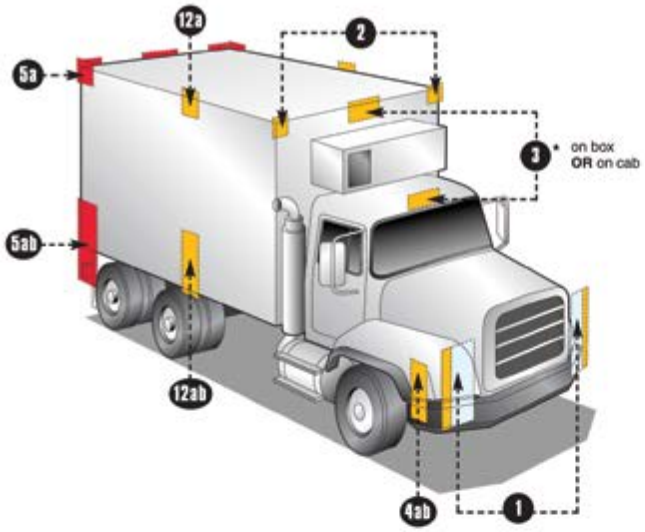

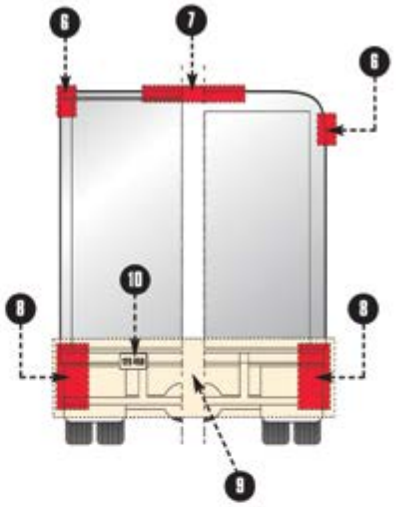

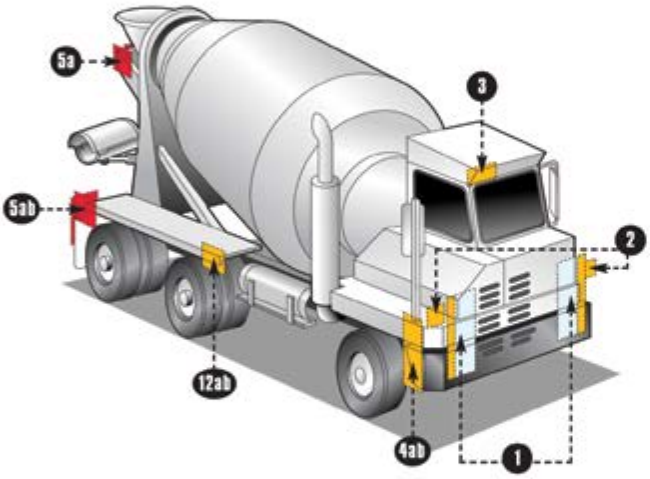

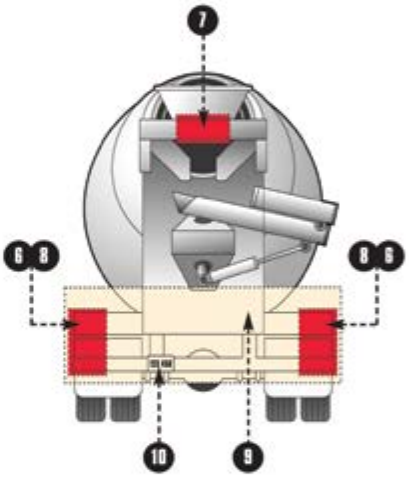

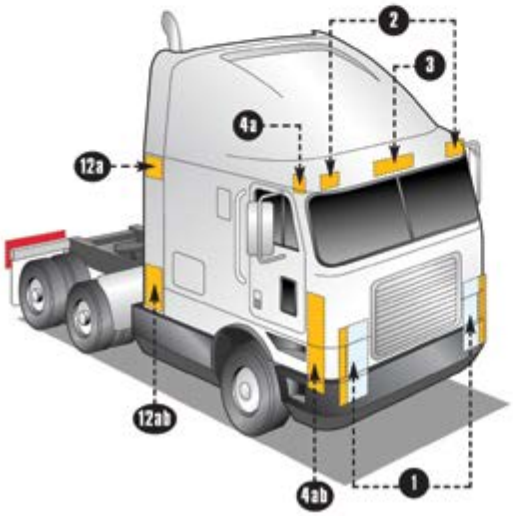

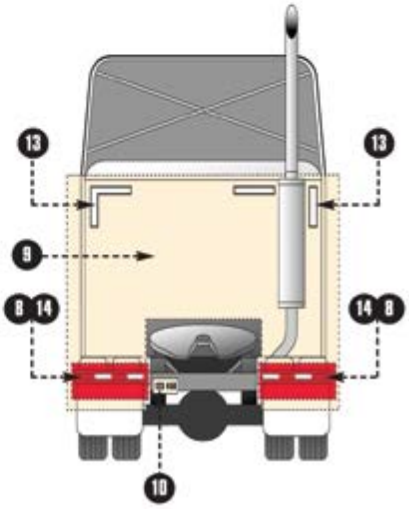

 © 2019 All Rights Reserved, Grote® Industries, Inc.

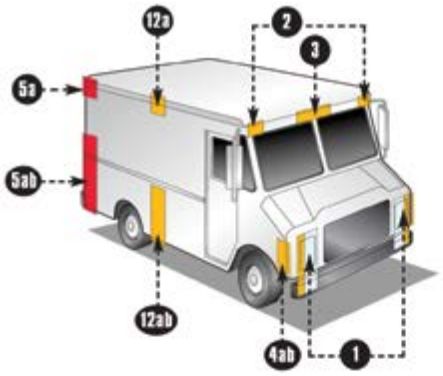

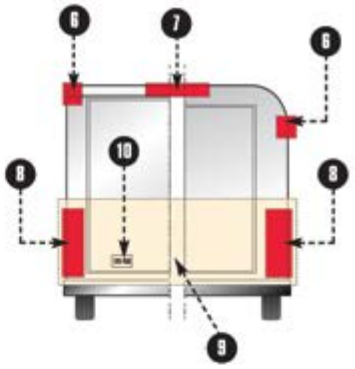

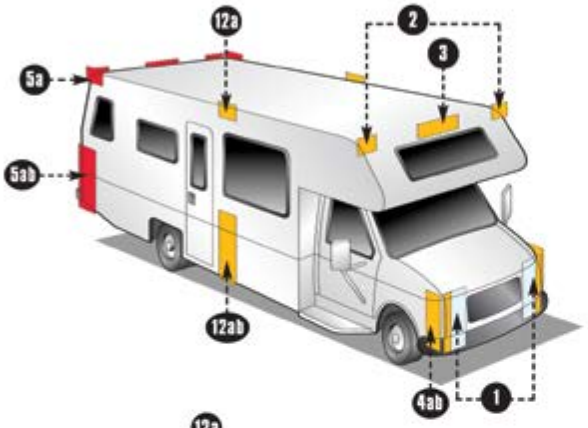

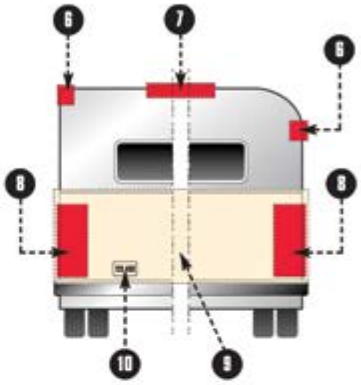

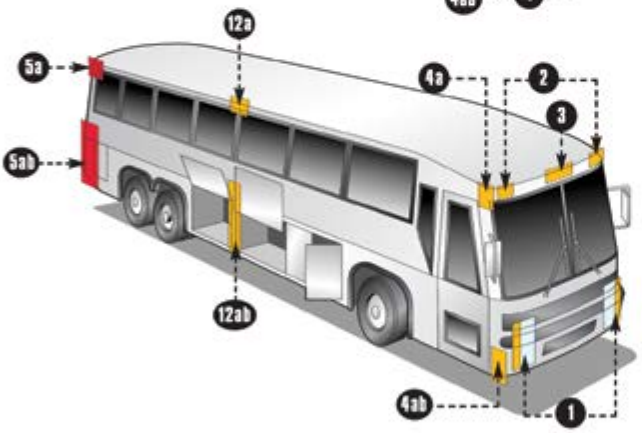

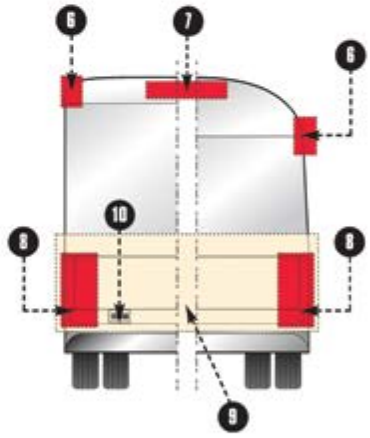

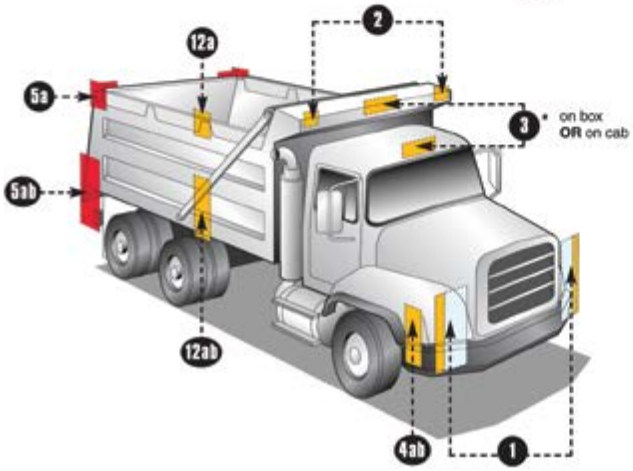

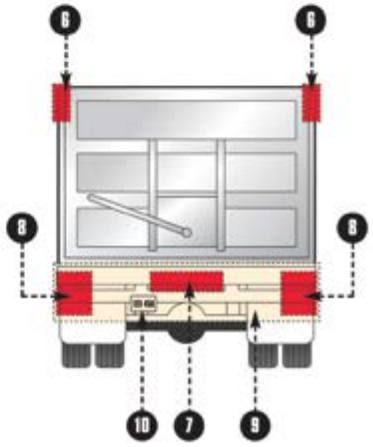

© 2019 All Rights Reserved, Grote® Industries, Inc.

9 COMMON CAUSES OF FAILURE IN TRUCK WIRING AND LIGHTING

VIBRATION

Broken lamp filaments are one of the most common problems caused by vibration, but they also can lead to the abrasion of mating surfaces, which cause connectors and splices to fail.

To minimize vibration problems, make certain that all wires and connectors are secured appropriately. Always secure the wiring as it exits the connector. Use cushioned mountings for lamps in applications where vibration is excessive.

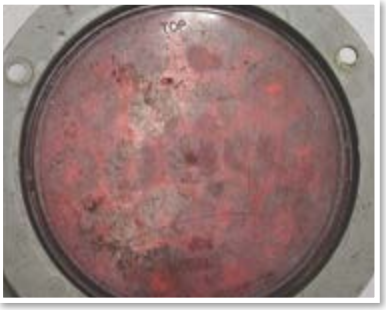

MOISTURE AND CORROSION

Condensed water droplets inside a lens or corrosion around a lamp socket are sure signs that moisture has penetrated the system.

Water can enter the system through ineffective wire seals, unprotected splices, unsealed crimps and connectors and non-mating seals.

When making repairs, don't replace a sealed system with unsealed components. Make certain that connector seals are in place and undamaged. Inspect them carefully for cuts, tears and punctures.

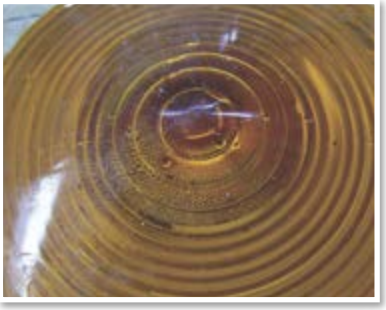

CHEMICAL DAMAGE

Continuous exposure to many of the common chemicals found in and around trucks can cause plastics to swell, crack, soften or otherwise become degraded. Diesel fuel and hot engine oil are the main culprits.

To minimize the effects of chemicals, inspect the wiring for signs of degradation. If it is occurring in an area that is generally free of contamination, check for leaky hoses, gaskets or fittings and repair if damaged or leaking.

To avoid damage from chemicals, don't run wiring in areas where the chance for continuous exposure is likely, such as under fuel lines and filters.

ABRASION

Abrasion occurs when wires or wire wraps are allowed to run against frame members or other abrasive surfaces. Once the insulation is worn away, bare conductors may contact a ground surface and create a grounded circuit. Or, it could cause wear to the point of fracture resulting in an open circuit.

Using the proper routing and coverings will help to prevent wear areas and abrasive damage.

Worn coverings such as loom, convoluted tubing or spiral wrap should be replaced if they are no longer providing sufficient protection for the wires inside.

 © 2019 All Rights Reserved, Grote® Industries, Inc.

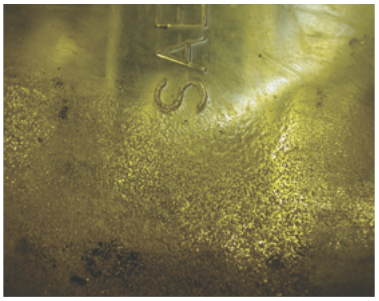
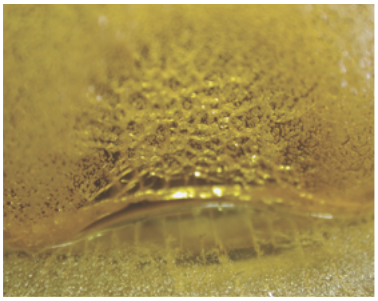

EXTREME TEMPERATURES

A variety of conditions lead to extreme temperature build-up that can damage lighting and wiring. These include leaving a trailer's tail lights on when the trailer is backed up to a dock and airflow around the lights is prohibited.

When lights have been damaged from heat buildup, the lenses are often bubbled and misshapen. Where extreme temperatures can't be avoided, special heat-resistant wires and materials should be used.

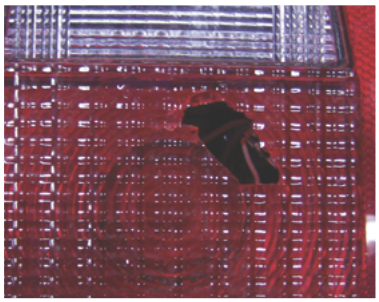
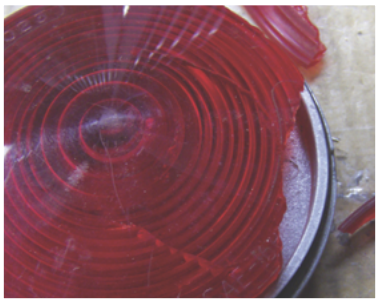

IMPACT

Lighting and wiring must be protected from the impact of rocks, gravel and other road debris. A major impact can cause enough damage to require extensive repairs. Smaller, more frequent impacts over time may deliver equally extensive damage. Such damage can cause problems although the wires are contained in a loom or other covering. During inspection, always check for damage from impacts and replace any wiring or lights that appear to be damaged. Make certain that the replacement parts are equivalent to or better than the original.

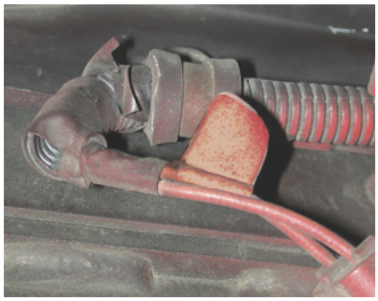

FLEXING

Wiring in a truck often must make sharp turns around corners, and can be subjected to constant flexing where doors or hoods are opened and closed repeatedly.

To prevent wire damage from repeated flexing, avoid tight radius turns. Make sure that the wire is not snagged or stressed at its maximum extension. Also, make certain that the wire moves smoothly through its flexing cycle and doesn't rub or scrape against adjacent components.

TENSILE LOADS

Wiring should not be considered an appropriate load-bearing component. It's easy to exceed the designed load limit by inadvertently installing wires under tension or snagging a section of wire on one of the moving parts. Using a wire bundle as a handhold or step can destroy the integrity of the conductor and its connections. So can the weight of accumulated ice, snow, mud and other materials.

Each of these points must be considered carefully when routing wires in a wiring harness.

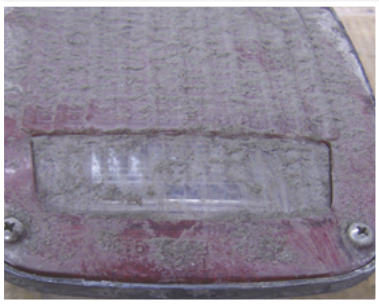
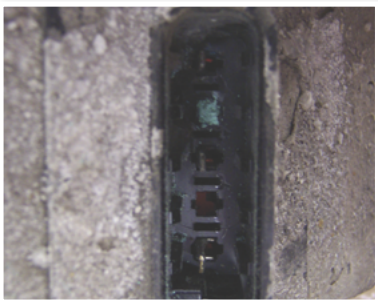

GRIT AND SAND

Accumulation of abrasive materials can lead to damage, especially when combined with vibration. If gritty materials enter connections, they can accelerate the wear on contact points, causing interruption of the circuit and failure of devices. Sand and grit also can attract and hold moisture, creating conditions conducive to corrosion. In some cases, sand and grit may work their way inside protective coverings and abrade the insulation of wires running through them.

One of the ways of reducing sand and grit buildup is to eliminate abrasive materials in the areas where wiring is present. Another way is to seal openings on protective coverings to keep gritty materials from entering.

For more information, visit ***www.grote.com***

© 2019 All Rights Reserved, Grote® Industries, Inc.

A FAMILY'S MULTI-GENERATIONAL COMMITMENT TO THE VEHICLE AND TRANSPORTATION LIGHTING INDUSTRY.

William D. Grote, Founder, Grote® Industries, 1901

Grote® Industries is a family-owned business, just like many of the distributors, fleets, and OEMs we serve. Like a number of our customers, we're proud of our family's multi-generational commitment to the transportation industry that reaches back more than a century. We're thankful for the visionary legacy of our predecessors and because of it, we can't help but see the past, present and future of the lighting industry in a different context from those who simply find themselves working in the lighting business.

Founded on the principles of solid customer relationships, continuous innovation and exceptional product performance, Grote® is committed to propelling itself and its industry, forward, with inventive products and challenging ideas.

As a corporation, our family's culture extends to our entire organization, around the globe and particularly to our customer-facing staff. Grote® is not sales oriented, we're not engineering oriented – we're relationship oriented and we're working hard every day to uphold our reputation and continue to earn your trust.

The Grote family has played a prominent role in shaping the vehicle lighting industry. We are deeply and personally engaged today, as we will be in the future, to make the kind of brave choices and bold decisions that will help move the vehicle lighting industry ahead and into an even brighter tomorrow.

Grote Industries, Inc.
2600 Lanier Drive
Madison, Indiana 47250
USA
Phone: 812-273-1296
Phone: 800-628-0809
Email: safety@grote.com

Grote Industries, Co.
230 Travail Road
Markham, Ontario L3S 3J1
Canada
Phone: 905-209-9744
Phone: 800-268-5612
Email: canada@grote.com

Grote Comercial Latinoamérica S. de R.L. de C.V.
Ave. Arco Vial #201 Int 5
Col. Parque Industrial Monterrey
Código Postal 66603
Apodaca, Nuevo León CP 66603
México
Phone: +(52) 818262-4413
Email: mexico@grote.com

Grote Industries Europe GmbH
William-Grote-Weg 1
D-94327 Bogen
Germany
Phone: +49 9422 40331-0
Email: europe@grote.com

Grote Shanghai Vehicle Lighting Systems Co., Ltd.
907A, 665 North Songwei Road,
Songjiang District, Shanghai
Phone: +86.21.5774.9633
Email: asia@grote.com

GROTE.COM

56-9513-54